

Where quality becomes beauty

English

IMAGING
ACTEON



X MIND unity

Quality, Design, your image

Because you pay more and more attention to the look and effectiveness of your practice.

ACTEON® SATELEC® has developed X-Mind™ unity with:

- uncompromising design
- clean lines
- proven quality
- superior materials
- unique technological advantages





X MIND unity + SOPIX inside

The perfect union



SOPIX ready

X-Mind™ unity is pre-wired to allow for the integration of the SOPIX digital sensor. Therefore, you can simply connect it to your X-Mind™ unity at the time of installation or anytime in the future.



SOPIX inside

SOPIX inside enables integration without any visible cables.
SOPIX inside connects effortlessly to the X-Mind™ unity without technical assistance within a minute. Plug and Play!


X MIND
0.080
70
ACE
06
kV
mA
ACTEON

X MIND unity + SOPIX inside

Less radiation

With the ACE technology, patented by SOPRO®, over-exposed images are eliminated.

Regardless of the amount of radiation emitted by the generator, the SOPIX sensor only uses the optimal dose required for a quality image.
This technology applied to X-Mind™ unity allows the SOPIX sensor to start and stop the generator thus avoiding all risk of over exposing the image and patient as well as unnecessary re-takes of acquisitions.
The patient only receives the necessary and adapted dose to his dental morphology.

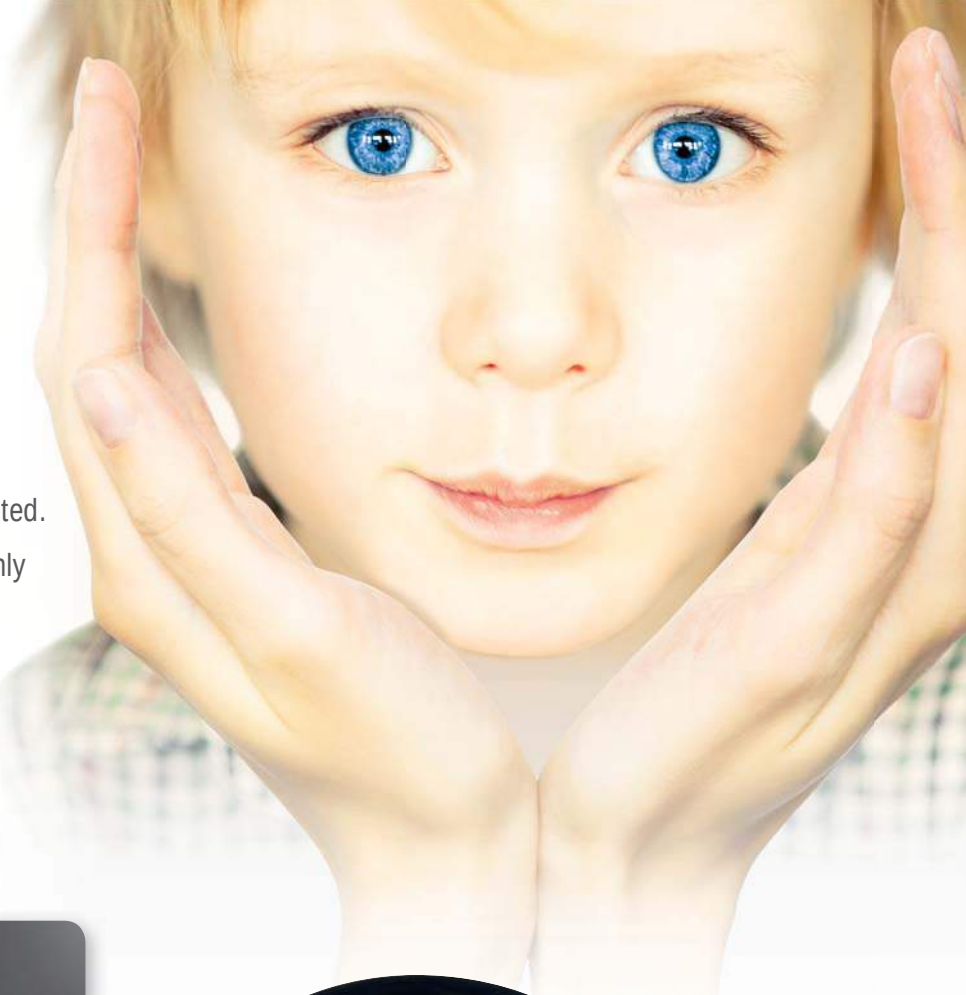

LOW DOSE

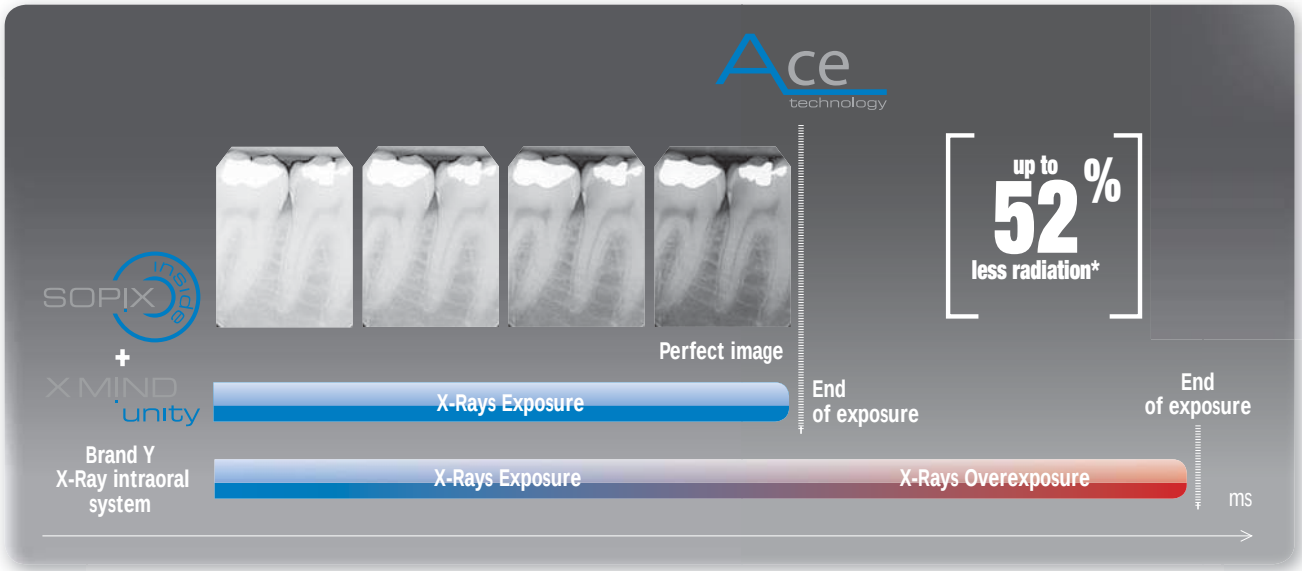

* Reduction variable according to the patient's morphology.



Traceability.

The dose received by the patient after each exposure appears on the timer's screen.

With SOPIX inside, this dose is also recorded in the patient's file of SOPRO Imaging ensuring permanent traceability.

XMIND unity + SOPIX inside

Work comfort

Due to its ergonomically designed holder there is no danger of the sensor falling or breaking
and always remains within hands reach for optimal working comfort.
SOPIX inside is internally wired eliminating the need for external wiring: ease of use and aesthetics of your practice.






SOPRO-Imaging
Patient
Image
Doctor
Capture
Display
Window
Help
SOPRO-Imaging 1.01 –
| 2 – Mr. John SMITH
W7.png
17/01/2012
Location
Comment
1.00
17/01/2012



X MIND unity

A sharp and contrasted image

The X-Mind™ unity has a 0.4 mm focal spot.
It has several configurable radiological settings:

- the anodic voltage (60, 65 and 70 kV)
- the anodic current (from 4 to 7 mA)

These parameters ensure a sharp and contrasted image with defined contours.

The generator focal spot Y:
0.7 mm



The generator focal spot
of X-Mind™ unity: 0.4 mm



X MIND unity

Fluidity and stability

You can singlehandedly position and stabilize X-Mind™ unity.
Movement is fluid and is done without any effort or stress.
The anti-vibration and anti-movement mechanism ensures drift free positioning during an exposure.






X MIND
unity

XMIND unity

Ergonomic and simplistic

THE «MEMORY» FUNCTION allows modifying for the pre-programmed exposure times to adapt to the specifications of your sensor or film

THE EXPOSURE PARAMETERS are adjusted according to the type of tooth - (incisor, premolar, molar)



A CLEAR AND LARGE LCD SCREEN
to easily see the main parameters
at a distance

Displays **THE PARAMETERS** kV, mA, type
of film and ACE selection (SOPIX inside)

THE DOSE IS DISPLAYED
when simultaneously pressing
the buttons « – and + »

Selection of the **PATIENT MORPHOLOGY**
adult, child

SELECTION OF THE EXAM TYPE
occlusal or inter proximal



Acquiring an X-ray is done with the
integrated firing switch.
A remote firing switch is available as
an option.


0.080
X MIND
unity


0.080
X MIND
unity



X MIND unity

More flexibility

The X-Mind™ unity can accommodate any operatory configuration.
3 arm lengths are available: 0.40 m, 0.80 m, 1.10 m and can be top or bottom mounted.

With its adaptable wall plate, it is easy to replace an older generator with the X-Mind™ unity without having to do additional drilling on the wall.

X MIND unity

Technical specifications

Classification	Class 1 type B
Supply voltage	100–240 V
Maximum power absorption	850 VA
X-ray tube	TOSHIBA D-041
Frequency	50/60 Hz
Focal spot	0.4 mm
Total filtration	>1.5 mm Al @ 70 kV
Leakage radiation	< 0,25 mGy / h
Cooling duty cycle for 1 s	32 s
Technology	High frequency DC
Maximum anode current	7 mA
X-ray tube voltage	60/65/70 kV
Maximum exposure time	2 s
Compatibility	Film, phosphor plate, digital sensor
Weight	23 kg
Configuration	Wall mounting top and bottom
Timer	Microprocessor controlled

Accessories

Circular cone Ø 60 mm	20 cm (8'') or 30 cm (12'')
Rectangular cone 45 x 36 mm	30 cm (12'')
Arm extension	0.40 m, 0.80 m, 1.10 m
SOPIX inside/SOPIX² inside	Size 1, size 2
Adaptable mounting wall plate	
Remote exposure switch	







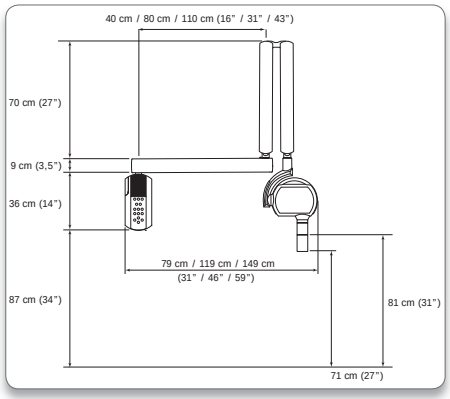

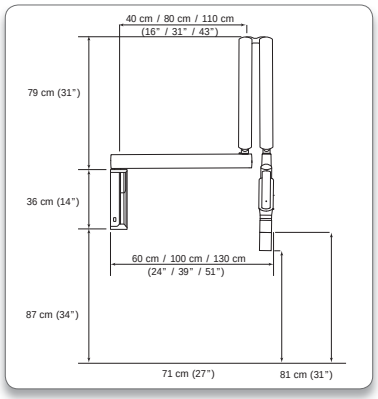

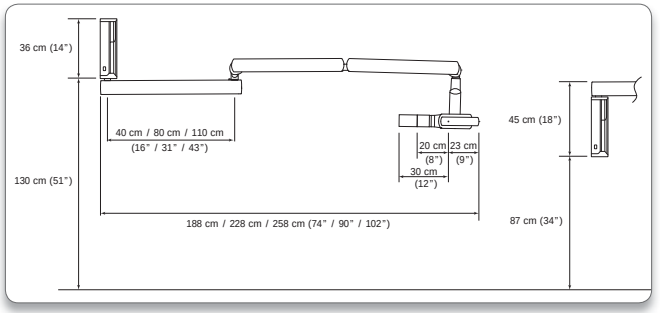

Manufactured in compliance with currently applicable regulations and standards (EC Directive 93/42/EEC and sub-segment amendment).
IEC 60601-2-65 imposes for each x-ray generator furnished with a digital sensor to use a square cone.

DEGOTZEN • A Company of ACTEON Group • Via Roma 45 • 21057 Olgiate Olona (VA)• ITALY
Tel +39 (0) 331 376 760 • Fax +39 (0) 331 376 763 • www.acteongroup.com

Non contractual document - Réf. 707097C / D03021 - 12/2015 - Copyright © 2015 SOPRO. All rights reserved. No information or part of this document may be reproduced or transmitted in any form without the prior permission of SOPRO.

PUBLICIS ACTIV - RCS Paris B 337 934 483 - 02876Se