Browiner
Mobile X-ray Expert

More than Lighter
MobileCooper Series
Digital Radiography System



MobileCooper Series



Browiner

Shenzhen Browiner Tech Co., Ltd

Tel: +86 755 2691 7186
Website: www.browiner.com
Email: intl-market@browiner.com
Add: Room 501,Building C,Ganghongji High-Tech Intelligent Industrial Park, No.1008,Songbai Road, Yangguang Community, Xili Street, Nanshan District, 518055 Shenzhen, P.R.CHINA

This brochure includes standard & optional configuration.
Please contact our local sales representative for availability information.
Specifications and appearance are subject to change without notice.

Ver: 202209V01

MobileCooper Series

More than Lighter

MobileCooper is an all-around and affordable mobile X-ray system, that meets the needs of various medical situations. Highly intergrated and compact design make the device lighter and smarter, and a high-performance imaging system ensures imaging is faster and clearer. It offers you exceptional quality and operation, which enhances your daily productivity and comfort of use.

- High power output
- Rotatable column
- Lightweight and compact structure
- Novel folding arm
- High SID
- 17-inch touch screen
- Large-capacity Li-ion battery
- Wireless detector



Movement at Ease

The compact and light system enables effortless movement on your route to each patient.

Lightweight

Combing integration technology with innovative material, MobileCooper is lightweight and maximizes your satisfaction during movement.

Slim body

The footprint is small thanks to the compact design, which allows for easy movement and turning even in tight spaces, such as crowded emergency rooms, narrow corridors and bedsides.

Clear field of vision

During transport, the folding arm offers a clear view of your surroundings to protect the safety of personnel and the facility.



Seamless Workflow

MobileCooper is designed for great maneuverability which helps technician focus more on patient care and speed up productivity.

Effortless positioning

Wide coverage provides technicians with more flexibility and efficiency for positioning. The rotatable column makes it much easier to maneuver the tube head in extremely tight spaces.



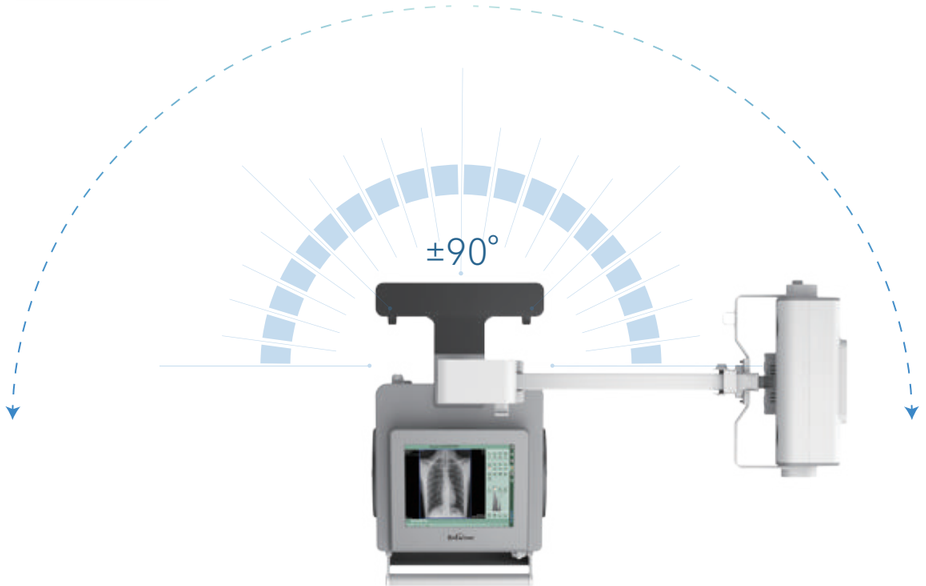

Ultra-long working time

The high-performance Li-ion battery enables quick charge and offers long standby and operation time. Also, plug-in exposure is available, which ensures continuous and efficient work.





17-inch touchscreen

The capacitive touchscreen allows for setting examination parameters and reading image details easily.

High SID

Up to 2 meters SID meets various exposure needs of the body.

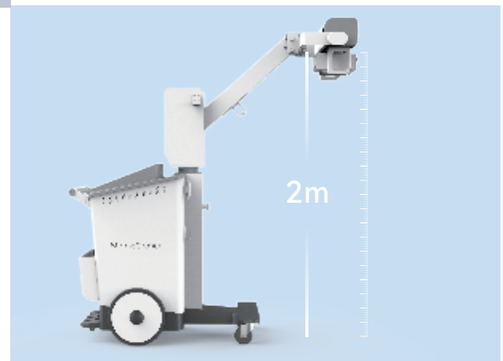



Remote Control

Distance up to 30 meters ensures the technician's safety.

Clear and Accurate

Powerful imaging chain

The high power facilitates stable and exceptional X-rays.

A high-speed rotating anode accelerates heat dissipation, allowing continuous working for a long time.

The X-ray tube, separated from the generator, has an excellent performance in cooling and longer service life.

High-definition detector

With advanced detectors, MobileCooper delivers excellent images fast. It gives you the clear, detailed, high-contrast images you need for better decision-making at a low dose.

High-resolution

Csl technology

Large size

WIFI connection

Lightweight

Multiple options



2 designs option





A total solution for medical image workstation

- Acquiring patient information from HIS/RIS
- Emergency mode for quick registration
- Multi APRs for preset parameters
- Compatibility with all PACS for image storage, retrieval and edit

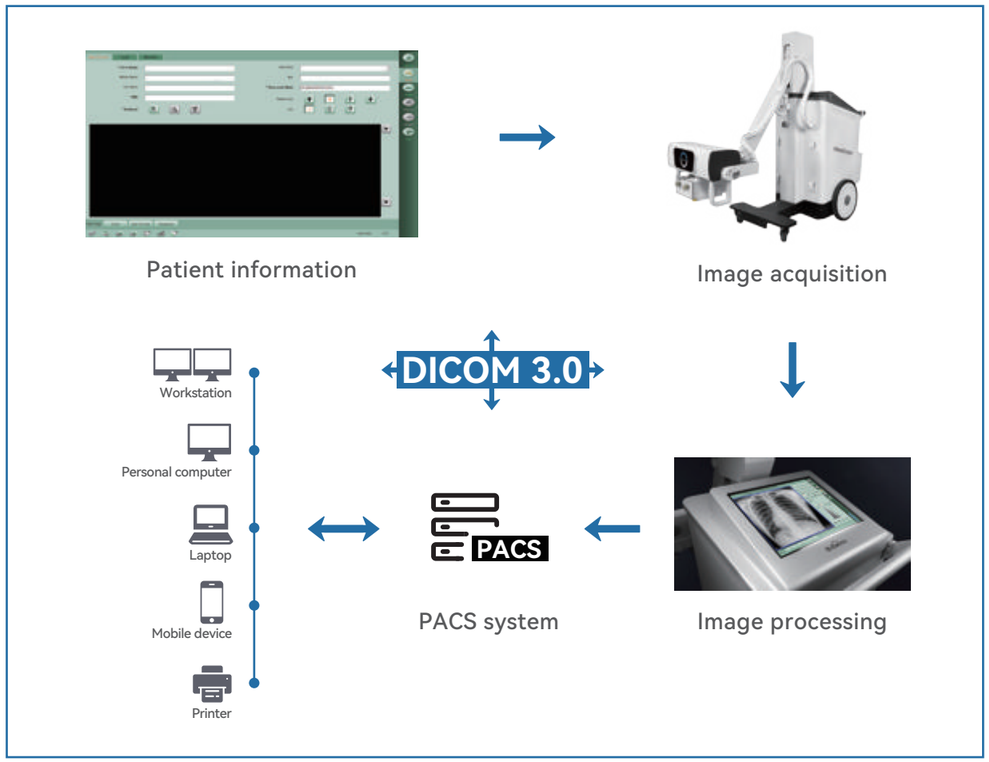

- The imaging processing improves the image quality and enhances the confidence for diagnosis.

Fast imaging

Noise reduction

Frequency division

Imaging enhancement

LUT curve

Balanced processing

Clinical images

