euromex
microscopes holland



CATALOG 2026

education
life science
industry



contents

euromex
MICROSCOPE COLLECTION
2026

EDUCATION 1

EDUCATION 2

LIFE SCIENCE
biological microscopes 3

LIFE SCIENCE
fluorescence microscopes 4

LIFE SCIENCE
stereo microscopes 5

INDUSTRY 6

INDUSTRY 7

DIGITAL SOLUTIONS
all sectors 8

ACCESSORIES
for microscopy 9

OTHER OPTICAL PRODUCTS
magnifiers | instruments 10

1 EDUCATION | BIOLOGICAL MICROSCOPES
MicroBlue • EcoBlue • BioBlue
BioBlue.Lab • BlueScope • bScope • iScope

2 EDUCATION | STEREO MICROSCOPES
EduBlue • StereoBlue
NexiusZoom • AP series

3 LIFE SCIENCE | BIOLOGICAL MICROSCOPES
BlueScope • bScope • BioBlue.Lab • iScope • Achios-X Observer
Delphi-X Observer • Delphi-X Inverso • Oxion Inverso

4 LIFE SCIENCE | FLUORESCENCE MICROSCOPES
bScope • iScope • Achios-X Observer • Delphi-X Observer • Achios-X Inverso
Delphi-X Inverso • Oxion Inverso • fluorescence LED light sources • fluorescence filter sets

5 LIFE SCIENCE | STEREO MICROSCOPES
StereoBlue • NexiusZoom (EVO)
UltraZoom • DZ series • Z series

6 INDUSTRY | STEREO MICROSCOPES
NexiusZoom, EVO and ESD • NexiusZoom for gemology
UltraZoom • StereoBlue • DZ series • Z series • BE-IR series

7 INDUSTRY | MATERIALS SCIENCE MICROSCOPES
bScope • bScope large samples • Oscope • Achios-X Observer
Delphi-X Observer • Oxion Inverso • Achios-X Inverso • Delphi-X Inverso

8 DIGITAL SOLUTIONS
digital microcopes • MacroZooms • USB cameras • WiFi camera
cooled cameras • HD cameras • tablet cameras • software • adapters

9 ACCESSORIES | FOR MICROSCOPY
illumination solutions • preparation accessories • dissection kits
microscope prepared slides • Globe professional microscope slides • disposables • stains

10 OTHER OPTICAL PRODUCTS
magnifiers & measuring microscopes
refractometers • polarimeters • spectroscopes

about euromex

Euromex Microscopes is a leading manufacturer of microscopes and other optical instruments. Founded in 1966, Euromex has become a world-class supplier of biological, stereo and metallurgical microscopes

The corporate office is based in Duiven, the Netherlands. A facility with a logistics warehouse, an opto-mechanical workshop, an R&D department and a high-level quality control department

Around the world, Euromex operates in more than 120 countries through distributors, resellers and agents. A wide variety of customers such as schools and educational institutes, clinical and research laboratories and a broad range of industrial customers are using Euromex microscopes

Explore Euromex's extensive product range in this comprehensive 2026 grand catalog or visit us online at **www.euromex.com**

Physix Photonics is an affiliated company of Euromex Microscopes and specializes in the production of optical components and optical assemblies. The offering varies from custom plan and curved optics to uniquely shaped optical elements, provided with optical coatings, covering wavelengths from deep ultraviolet (DUV) to infrared (IR). Euromex draws on the extensive expertise of Physix engineers to meet the stringent requirements for optical components used in microscopy manufacturing. For comprehensive details about Physix Photonics, please visit **www.physix.com**

Euromex Microscopes and Physix Photonics are both subsidiaries of **GSI Group Holdings**, a collection of leading brands serving the biotech, clinical diagnostics, life sciences, education and industrial sectors with a broad array of mission-critical laboratory-related consumable supplies, benchtop equipment and related accessories. GSI Group Holdings is headquartered in Irvine, California, USA. For more details about the brands and activities of the companies under GSI Group Holdings, please visit **www.gsigroupholdings.com**

euromex.academy

Visit our academy for video tutorials and manuals

View the product videos on YouTube

choose the right microscope

microscope selector

We created a guide to help you find the right microscope for your specific application. A list of recommended models for most common applications in education, life science and industry can simplify your choice

SEE PAGE 410

At the end of the catalog you will also find an index page, listing the products featuring in this catalog alphabetically

SEE PAGE 418

Achios-X observer

FEATURED



Achios-X Observer

Discover the new Achios-X Observer microscopes for life science, page 104

biological microscopes

product information

Euromex offers a wide range of life science microscopes that are used by researchers and biologists worldwide

On the next pages you will find details about our different models and we will get you introduced to technologies in microscopy such as the iCare sensor, CSS system and LED technology, which brings Euromex users to the next level of microscopy

life science

biological microscopes



product information

BLUESCOPE • 78
BSCOPE • 82
BIOBLUE.LAB • 90
ISCOPE • 94
ACHIOS-X OBSERVER • 104
DELPHI-X OBSERVER • 112
ACHIOS-X INVERSO • 122
DELPHI-X INVERSO • 128
OXION INVERSO • 134



BlueScope

The all new microscopes of the BlueScope series are designed for universities and small laboratories. These microscopes are equipped with a rotating head that can be adjusted in two heights and have a rackless stage for user safety and ergonomics. A color-coded condenser, quick focus aid and a storage compartment makes this microscope very easy to use



BL.1152

product information



BL.XXX1 MONO	370 (h) x 160 (w) x 200 mm (d)	2.8 kg
BL.XXX2 BINO	365 (h) x 169 (w) x 208 mm (d)	4.2 kg
BL.XXX3 TRINO	409 (h) x 169 (w) x 205 mm (d)	4.3 kg

HIGHLIGHTS

- **WF 10x/20 mm eyepieces**
- **Models with an integrated 5.0 MP CMOS camera, with a 7" LCD screen or tablet**
- **Universal USB-C 5V charging port**
- **Smart storage compartment**
- **Slot for polarization filter**
- **Integrated mechanical X-Y stage**
- **Color-coded height adjustable condenser**
- **Köhler illumination**
- **Dual colored illumination: 3 W white & halogen colored NeoLED™**
- **Quick focus aid**
- **10 Years warranty**



The back of the BlueScope

SPECIFICATIONS

EYEPIECE(S)

Wide field WF 10x/20 mm secured eyepieces.
The eyepiece of monocular models is supplied with pointer

HEAD

- Monocular models with 45° inclined tubes
- Binocular and trinocular models have 30° inclined tubes, interpupillary distance is adjustable between 48 and 75 mm and equipped with a ± 5 diopter adjustment on both tubes
- All heads are 360° rotatable. The trinocular head has a fixed light path beam splitter (50:50) and generates an erect image
- The BlueScope can also be supplied with a discussion head
- Models with an integrated 5.0 MP CMOS camera, with a 7" LCD screen or tablet available (See chapter 8)

NOSEPIECE

Reversed quadruple nosepiece on ball bearings

OBJECTIVES - 45 MM PARFOCAL

All models are supplied with Semi Plan 4x/0.10, 10x/0.25 and S40x/0.65 objectives. The S40x, S60x (optional) and S100x (optional) objectives are spring loaded
All optics are anti-fungus treated and anti-reflection coated for maximum light throughput

FOCUSING

Coaxial coarse and fine adjustments with 100 graduations. Precision 2 µm per graduation, 0.2 mm per rotation. Total travel range is approximately 10 mm. Supplied with an adjustable rack stop to prevent damage to sample and objectives. Improved coarse & fine adjustment, which is equipped with tension control. With quick focusing aid for finding the slides focusing region with ease

STAGE

Rackless 140 x 135 mm stage with mechanical 70 x 50 mm X-Y translation stage

CONDENSER

Color coded, height adjustable Abbe condenser N.A. 1.25 with iris diaphragm and filter holder

KÖHLER ILLUMINATION

Köhler illumination ensures the highest possible contrast and the maximum achievable resolving power. It generates a uniform illumination of the sample and eliminates all interference from dust on lenses and side glare of the light source

ANTI-THEFT SLOT

At the back of the microscope a Kensington Security slot is placed, which can be used to secure the instrument from theft

DUAL ILLUMINATION SYSTEM

- 3 W white NeoLED™: 6000 – 6500 K, ideal for standard observations with crisp, cool lighting
- 3 W halogen colored NeoLED™: 3000 – 3200 K, enhances contrast for specific applications such as transparent objects

PACKAGE CONTENT

Supplied with blue filter, Allen key, 5 ml immersion oil, 100-240 Vac / 5 Vdc USB multi-plug power adapter, 3 rechargeable type AA batteries, manual and dust cover

DIMENSIONS

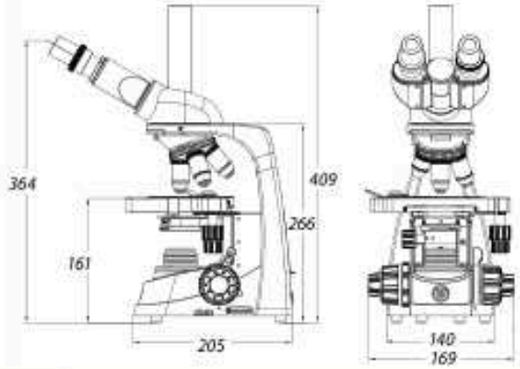

MODELS	Mono	Bino	Trino	Digital	Digital tablet	Digital 7" LCD	4/10/40x objectives	S60x objective	S100x objective	Mechanical X-Y Stage	Dual color NeoLED™
BL.1051	•						•			•	•
BL.1151	•						•		•	•	•
BL.1651	•						•	•		•	•
BL.1152		•					•		•	•	•
BL.1652		•					•	•		•	•
BL.1153			•				•		•	•	•
BL.1653			•				•	•		•	•
BL.1055	•			•			•			•	•
BL.1057		•		•			•			•	•
BL.1057-T		•			•		•			•	•
BL.1050-LCD						•	•			•	•

See chapter 8

ACCESSORIES

EYEPIECES

Ø 23.2 mm tube

BL.6010 WF 10x/20 mm eyepiece
BL.6010-P WF 10x/20 mm eyepiece with pointer
BL.6010-M WF 10x/20 mm eyepiece with micrometer scale
BL.6015 WF 15x/13 mm eyepiece
BL.6020 WF 20x/12 mm eyepiece
BL.6025 WF 25x/8 mm eyepiece
BL.6099 Pair of eyecups

OBJECTIVES

SMP Semi Plan objectives

BL.7104 4x/0.10 SMP objective. WD 16 mm
BL.7110 10x/0.25 SMP objective. WD 4.60 mm
BL.7120 20x/0.40 SMP objective. WD 0.90 mm
BL.7140 S40x/0.65 SMP objective. WD 0.68 mm
BL.7160 S60x/0.85 SMP objective. WD 0.60 mm
BL.7100 S100x/1.25 oil immersion objective. WD 0.21 mm

WD = working distance

MISCELLANEOUS

BL.9700 Blue filter
BL.9710 Frosted white filter
BL.9981 3 W NeoLED™ replacement unit
BL.9900 Aluminum case
AE.9918 Nylon microscope bag

about

Antoni van Leeuwenhoek

1632, Delft, the Netherlands

As a cloth merchant, Antoni van Leeuwenhoek became familiar with the use of magnifying glasses, which he used to check the quality of the fabric and the density of the weave. Eventually he began to grind and polish his own lenses. Around 1670 he developed the single microscope, which could magnify many times more than the compound microscopes of that time



VAN LEEUWENHOEK'S MICROSCOPE

The design of Van Leeuwenhoek's microscopes is relatively simple: a small glass lens riveted between two metal plates. The preparation sits on a pin that can move up and down and closer or further from the lens with screwsin order to focus

Where contemporaries' microscopes reached a magnification of around 30x, Van Leeuwenhoek made microscopes that were much more powerful. Most of Van Leeuwenhoek's microscopes magnified about 80x, but there were also outliers with a magnification factor of 250, which was phenomenal for the time

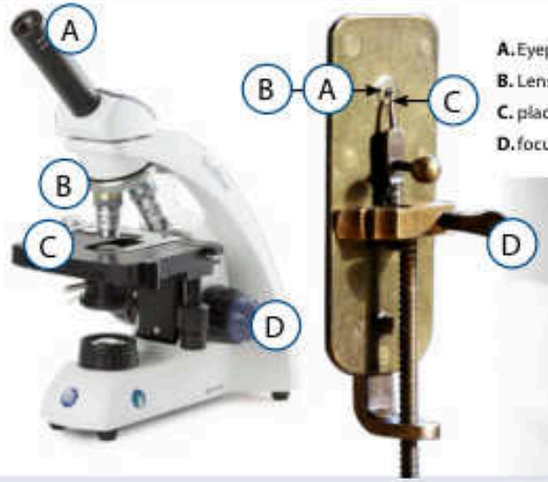

A. Eyepiece
B. Lens
C. place for object
D. focusing





bscope

NeoLED™

bScope

versatile and evolutive!

The well-equipped microscopes of the bScope series are intensively used in universities, small and mid-sized laboratories and in veterinary applications

The design of the bScope is both ergonomic and evolutive. Height adjustable eye tubes and low stage controls minimize fatigue during long working sessions and thus provide more comfort for microscopists. The robust, compact size of the bScope and the Cable Storage System allow more working space, safer operation and enable easy storage

product information

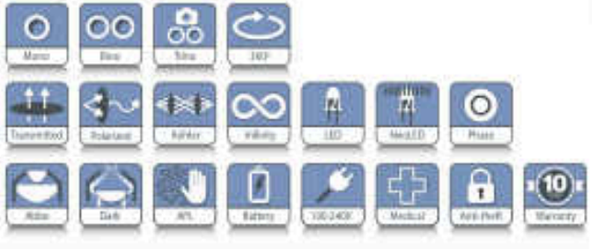



● *BS.1153-EPLi*

MONO: BS.1151-EPL
385 (h) x 235 (w) x 195 (d) | 6.3 kg
BINO: BS.1152-EPL / BS.1152-EPLi / BS.1152-PLi
400 (h) x 195 (w) x 235 mm (d) | 6.5 kg
TRINO: BS.1153-EPL / BS.1153-EPLi / BS.1153-PLi
459 (h) x 195 (w) x 235 mm (d) | 6.6 kg



● *BS.1152-PLi* ● *BS.1151-EPL*

HIGHLIGHTS

- **Monocular, binocular and trinocular models**
- **Digital models available**
- **HWF 10x/20 mm eyepieces**
- **Diopter adjustment on both tubes**
- **Reversed ball-bearing quadruple or quintuple nosepiece with slot for polarization filter**
- **E-plan, E-plan IOS and plan IOS objectives**
- **Plan phase IOS objectives**
- **Color coded condenser**
- **Rackless integrated mechanical X-Y stage**
- **3 W NeoLED™ adjustable illumination system**
- **Darkfield cardioid condenser with 3 W NeoLED™**
- **Integrated carrying grip**
- **Cable Storage System and anti-theft system**
- **10 Years warranty**

SPECIFICATIONS

EYEPIECE(S)

High wide field HWF 10x/20 mm secured eyepiece(s) with 20 mm field of view (Ø 23.2 mm tube). The eyepiece of monocular models is supplied with pointer

HEAD

The bScope is available with a monocular head (45° inclined Ø 23.2 mm tube) or with binocular or trinocular heads equipped with a Siedentopf type head, 360° rotatable and equipped with 30° inclined Ø 23.2 mm tubes. Binocular and trinocular models have a diopter ± 5 adjustment on the left eyepiece. The interpupillary distance is adjustable between 48 to 76 mm. The models equipped with plan infinity corrected PLi objectives have a unique swiveling system of the eyepiece tubes for ergonomic positioning of both tubes in a high (431 mm) and in a low position (377 mm). The trinocular head comes with a Ø 23.2 mm tube, ensuring a maximum of flexibility and has a fixed light path beam splitter (20:80) and generates an erect image. Models with an integrated USB-2.0 camera are supplied with a 5.0 MP 1/2.5" CMOS sensor with a resolution of 2592 x 1944 pixels (see chapter 8)

NOSEPIECE

Revolving and reversed ball-bearing quadruple or quintuple nosepiece

OBJECTIVES - 45 MM PARFOCAL

The state-of-the-art production techniques and multi-layer coatings used for the manufacturing of the bScope objectives enable the bScope to be used for the most demanding applications. World class spherical aberration correction and modern CNC and assembly technology ensure the perfect centering of the objectives

- Brightfield models: E-plan, E-plan IOS infinity corrected, plan IOS infinity corrected 4x/0.10, 10x/0.25, 20x/0.40, S40x/0.65, S60x/0.85 and S100x/1.25 oil immersion objectives
- Phase contrast models: Plan phase IOS infinity corrected 10x/0.25, 20x/0.40, S40x/0.65 and S100x/1.25 oil immersion objectives
- Darkfield model: E-plan 4x/0.10, 10x/0.25, 20x/0.40, S40x/0.65, S60x/0.85 objectives. The s100x/1.25 oil immersion objective has a built-in iris diaphragm

All S40x, S60x and S100x oil immersion objectives are spring loaded. All optics are anti-fungus treated and anti-reflection coated for maximum light throughput

FOCUSING

Double coaxial, low-positioned coarse and fine adjustments with 180 graduations. Precision 1.1 µm, 200 µm per rotation, total travel range is approximately 19 mm. Supplied with an adjustable rack stop to prevent damage to sample and objectives. The coarse adjustment is equipped with friction control

STAGE

The bScope is equipped with a scratch resistant 152/197 x 131 mm stage with integrated 75 x 36 mm rackless mechanical X-Y stage, Vernier scale, soft-close removable specimen holder. The rackless stage has no protruding parts, enables smoother movements and is safer in use. Low-positioned X-Y control knobs prevent fatigue during long working sessions. The bScope can be equipped with a heating stage which can be set up to 50° Celsius by a PID temperature controller. Only available with newly purchased microscopes

CONDENSER FOR BRIGHTFIELD

The standard height adjustable Abbe N.A. 1.25 condenser for brightfield comes with an iris diaphragm and swing-out filter holder. The condenser is color coded. Optionally available swing-out Abbe condenser (BS.9105)

CONDENSER FOR ZERNIKE PHASE CONTRAST

The height adjustable Zernike NA. 1.25 phase contrast disc condenser comes with phase annuli for 10/20/S40x and S100x phase contrast oil objectives, an iris diaphragm, a swing-out filter holder and also a BF position for brightfield contrast. Phase contrast objectives exist in PL-PHi phase contrast version. Supplied with alignment telescope and green filter

CONDENSER FOR SIMPLE PHASE CONTRAST

The height adjustable NA. 1.25 simple phase contrast condenser has a free slot for either a slider for 10/S40x phase contrast objectives or a slider for 20/S100x phase contrast oil objectives. The condenser has an iris diaphragm and filter holder. The condenser includes a BF position for brightfield contrast with an iris diaphragm and filter holder. Phase contrast objectives exist in PL-PHi version. Supplied with alignment telescope and green filter

POLARIZATION

The bScope has an integrated slot above the nosepiece for an optional polarization filter

NEOLED™ ILLUMINATION

The 3 W adjustable Köhler NeoLED™ diascopic illumination is powered by an internal 100-240 V power supply making it suitable for worldwide use. The innovative NeoLED™ design offers larger apertures, allowing the optical system of the bScope microscope to produce images at higher resolutions, very close to the theoretical diffraction limit of the optics. Other benefits of the NeoLED™ is the low energy consumption, no heating and a long operating life span



Swing-out Abbe condenser 0.9/1.25 NA (BS.9105)



Zernike phase contrast condenser with filter holder



Ergonomic carrying grip for easy transportation

DARKFIELD EQUIPMENT

The BS.1153-EPL/DF is equipped with a darkfield oil immersion cardioid mirror condenser with an integrated 3 W LED illumination and a plan PL 5100x oil immersion objective with built-in iris



Darkfield cardioid mirror condenser

KÖHLER ILLUMINATION

A Köhler illumination system ensures for all infinity corrected IOS models the highest possible contrast and the maximum achievable resolving power. It generates a uniform illumination of the sample and eliminates all interference from dust on lenses and side glare of the light source

The Köhler illumination is optional for non-IOS models

CORDLESS USE

The optional rechargeable AA batteries turn the bScope into a cordless system

CSS – CABLE STORAGE SYSTEM

Allows users to easily stow away excess cable length into the back of the instrument during operation and to roll up the power cable for easy storage

CARRYING GRIP

The integrated carrying grip at the back of the microscope ensures safe transportation of the microscope

ANTI-THEFT SLOT

At the back of the microscope a Kensington Security Slot is placed, which can be used to secure the instrument from theft

PACKAGE CONTENT

Smart polystyrene packaging ensures a low environmental footprint while maintaining maximum safety during transport. Supplied with power cord, dust cover, tools, a spare fuse, white filter, user manual and 5 ml immersion oil

Phase contrast models are supplied with green filter and alignment telescope. An optional aluminum case can be supplied



CSS – Cable Storage System

BSCOPE FOR BRIGHTFIELD AND DARKFIELD *

MODELS	Bino	Trino	digital	HWF 10x/20 mm eyepieces	Quadruple nosepiece E-plan 4/10/540/ S100x oil	Quadruple nosepiece plan IOS 4/10/540/ S100x oil	Quintuple nosepiece E-plan IOS 4/10/ 540/S100x oil	Quintuple nosepiece plan IOS 4/10/540/ S100x oil	Köhler NeoLED™	Neo-LED	2-position swiveling ergo head
BS.1152-EPL	•			•	•					•	
BS.1153-EPL		•		•	•					•	
BS.1153-EPL/DF*		•		•	•					•	
BS.1152-EPLi	•			•			•		•		•
BS.1153-EPLi		•		•			•		•		•
BS.1152-PLi	•			•				•	•		•
BS.1153-PLi		•		•				•	•		•
BS.1152-PLi/4N	•			•		•			•		•
BS.1153-PLi/4N		•		•		•			•		•
BS.1157-EPLi	•		•	•			•		•		•
BS.1157-PLi	•		•	•				•	•		•

See chapter 8

** BS.1153-EPL/DF model is equipped with a darkfield oil immersion cardioid mirror condenser and a S100x oil immersion objective with built-in iris diaphragm*

Some models are also available as in vitro diagnostic medical devices class A - (EU) 2017/746. Contact your Euromex dealer

BSCOPE FOR PHASE CONTRAST *

MODELS	Bino	Trino	HWF 10x/20 mm eyepieces	Quintuple nosepiece plan phase IOS 10/20/S40/S100x oil	Köhler NeoLED™	2-position swiveling ergo head
BS.1152-PLPHi	•		•	•	•	•
BS.1153-PLPHi		•	•	•	•	•

** All models can be supplied with three rechargeable AA batteries*

All models are equipped with a 152/197 x 131 mm stage with integrated 75 x 36 mm rackless mechanical X-Y stage

These models are also available as in vitro diagnostic medical devices class A - (EU) 2017/746. Contact your Euromex dealer

ACCESSORIES AND SPARE PARTS

EYEPIECES

Ø 23.2 mm tube

BS.6010 HWF 10x/20 mm eyepiece

BS.6010-P HWF 10x/20 mm with pointer

BS.6010-C HWF 10x/20 mm eyepiece with crosshairs

BS.6010-CM HWF 10x/20 mm eyepiece, with 10/100 micrometer and crosshairs

BS.6012 WF 12.5x/14 mm eyepiece

BS.6015 WF 15x/11 mm eyepiece

BS.6020 WF 20x/11 mm eyepiece

BS.6099 Pair of eyecups

(H)WF = (high) wide field

OBJECTIVES

E-plan EPL, 45 mm parfocal

BS.7104 4x/0.10 EPL objective. WD 37.0 mm

BS.7110 10x/0.25 EPL objective. WD 6.61 mm

BS.7120 20x/0.40 EPL objective. WD 1.85 mm

BS.7140 S40x/0.65 EPL objective. WD 0.64 mm

BS.7160 S60x/0.85 EPL objective. WD 0.20 mm

BS.7100 S100x/1.25 EPL oil objective. WD 0.19 mm

Plan PL, 45 mm parfocal

86.521 S100x/1.25 PL oil immersion objective with built-in iris diaphragm. WD 0.33 mm

E-plan infinity corrected EPLi, IOS 45 mm parfocal

BS.8204 4x/0.10 EPLi objective. WD 18.9 mm

BS.8210 10x/0.25 EPLi objective. WD 5.95 mm

BS.8220 20x/0.40 EPLi objective. WD 2.61 mm

BS.8240 S40x/0.65 EPLi objective. WD 0.78 mm

BS.8200 S100x/1.25 EPLi oil objective. WD 0.36 mm

Plan infinity corrected PLi, IOS 45 mm parfocal

BS.8404 4x/0.10 PLi objective. WD 21.0 mm

BS.8410 10x/0.25 PLi objective. WD 5.0 mm

BS.8420 20x/0.40 PLi objective. WD 8.8 mm

BS.8440 S40x/0.65 PLi objective. WD 0.66 mm

BS.8400 S100x/1.25 PLi oil objective. WD 0.36 mm

Plan phase infinity corrected PLPHi, IOS 45 mm parfocal

BS.8710 10x/0.25 PLPHi objective. WD 5.0 mm

BS.8720 20x/0.40 PLPHi objective. WD 8.80 mm

BS.8740 S40x/0.65 PLPHi objective. WD 0.66 mm

BS.8700 S100x/1.25 PLPHi oil objective. WD 0.36 mm

WD = working distance

CONDENSERS

BS.9102 Abbe condenser 1,25 NA with slot for darkfield and phase contrast sliders

BS.9170 Darkfield stop for BS.9102 condenser

BS.9105 Swing-out Abbe condenser 0.9/1.25 NA

PHASE CONTRAST ATTACHMENTS

BS.9126 Zernike phase contrast kit with plan PLPHi 10/20/S40 and S100x oil phase contrast IOS infinity corrected objectives, Zernike rotating condenser, telescope and green filter

BS.9164 Phase contrast kit with Abbe condenser with slot for slider. Plan PLPHi phase S40x contrast objective, slider with 40x annuli, telescope and green filter

BS.9194 Slider with phase contrast annuli 40x. Needs BS.9102 condenser with slot

BS.9148 Alignment telescope for bScope IOS version with Ø 30 mm tubes

BS.9162 Phase contrast kit with Abbe condenser with slot for slider. Plan PLPH i 10/S40x phase contrast infinity corrected objectives, slider with 10 and 40x annuli, telescope and green filter

BS.9163 Phase contrast kit with Abbe condenser with slot for slider. Plan PLPHi 20/S100x oil phase contrast infinity corrected objectives, slider with 20 and 100x annuli, telescope and green filter



BS.9126



BS.9164

POLARIZATION ATTACHMENTS

BS.9660 Polarization kit: analyzer under head and polarizer on lamphouse

AE.5152-N Small rotatable stage to be used with BS.9660

BS.9647 Polarization polarizer Ø 16 mm for slider under bScope head

BS.9651 Polarization attachment for lamphouse of bScope with 360° scale

CAMERA ACCESSORIES

AE.5130 Universal Ø 23.2 mm tube adapter with built-in 2x lens for SLR photo camera with APS-C sensor. Needs T2 adapter

AE.5025 T2 adapter for Nikon D SLR digital camera

AE.5040 T2 adapter for Canon EOS SLR digital camera

MISCELLANEOUS

BS.9880 Köhler attachment

BS.9577-L Add-on for left handed mechanical X-Y stage (only with newly purchased microscope

BS.9870 Mirror attachment for bScope

BS.9900 Aluminum transport case

AE.9919 Nylon bag for bScope. 58(h) x 32(w) x 24(d)

BS.9993 NeoLED™ replacement unit

BS.9994 Halogen-NeoLED™ replacement unit

AE.1370 Set of rechargeable AA batteries, three pieces

AE.5226 Glass fuses 3A 250V, 10 pieces

DISPOSABLES

PB.5155 Microscope slides 76 x 26 mm, ground edges, 50 pieces per pack

PB.5157-W Microscope slides 76 x 26 mm, ground edges and frosted side white color, 50 pieces per pack

PB.5157-B Microscope slides 76 x 26 mm, ground edges and frosted side blue color, 50 pieces per pack

PB.5160 Microscope slides 76 x 26 mm with cavity, ground edges. 10 pieces per pack

PB.5165 Coverglasses 18 x 18 mm, thickness 0.13-0.17 mm, 100 pieces

PB.5168 Coverglasses 22 x 22 mm, thickness 0.13-0.17 mm, 100 pieces

PB.5245 Lens cleaning paper, 100 sheets per pack

PB.5255 Immersion oil (25 ml). n = 1.515

PB.5274 Isopropyl alcohol 99% (200 ml)

PB.5275 Cleaning kit: lens cleaning fluid, lint free lens tissues/paper, brush, air blower, cotton swabs

PB.5276 Microscope maintenance and servicing kit, 16 pieces: cleaning brush, screwdriver set of 6, air blower, 3 Allen keys, 1.5, 2, 2.5 mm, lens cleaning fluid 20 ml, cleaning cloth 140 x 140 mm, 100 lens tissue sheets, tube of maintenance grease, 10 ml bottle of oil, packed in a nice toolbox



AE.5152-N, small rotatable stage



BS.9900



BS.1153-PLPHi

DIMENSIONS

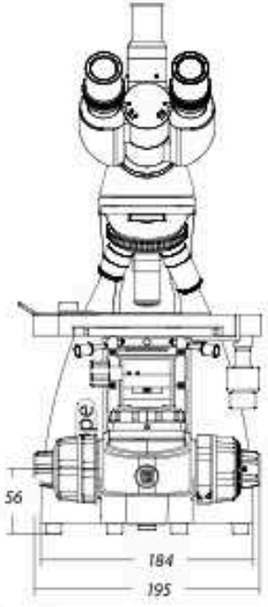

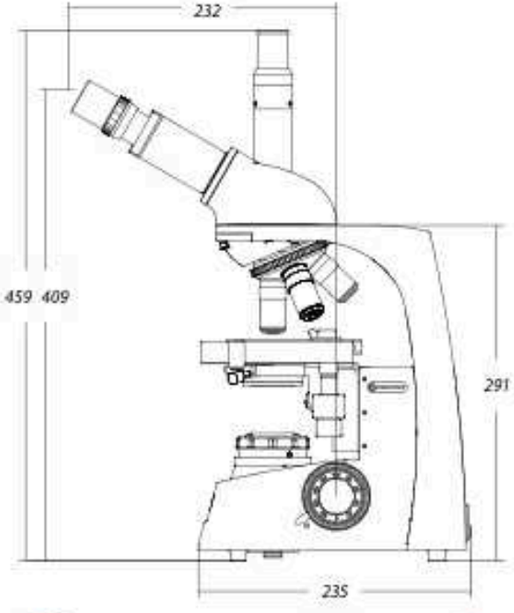



BlueLine

NeoLED™

BioBlue.Lab

The BioBlue.Lab is the ideal laboratory instrument. The steady base and infinity corrected objectives make the BioBlue.Lab a high quality all-round microscope

All models are equipped with NeoLED™ illumination system for high resolution images and are available in binocular and trinocular versions



BB.1153-PLi

product information



BB.1152-PLi
330 (h) x 190 (w) x 260 mm (d) | 5.4 kg
BB.1153-PLi
440 (h) x 190 (w) x 260 mm (d) | 5.6 kg

HIGHLIGHTS

- WF 10x/20 mm eyepieces
- Binocular and trinocular models
- Reversed quadruple nosepiece
- Non-infinity and infinity optical system
- Integrated rackless mechanical X-Y stage
- 3 W NeoLED™ illumination
- Ergonomic carrying grip
- 10 Years warranty



BioBlue

BioBlue.Lab

SPECIFICATIONS

These ergonomic easy-to-use microscopes have been designed specifically for laboratory and university applications

An important feature of the BioBlue.Lab is the rackless stage. The 150 x 140 mm stage has an integrated rackless mechanical X-Y stage with 75 x 30 mm travel range, which provides a smooth translation of the specimen and highly precise positioning. This feature plays an integral part in most demanding cytology and histopathology applications

The BioBlue.Lab microscope models offer great functionality and are equipped with WF 10x/20 mm eyepieces, plan and IOS plan 4x/ 10x/ S40x/ S100x infinity corrected objectives. This enhancement is suitable for a wide variety of routine applications in laboratories and field microscopy

EYEPIECES

Wide field WF 10x/20 mm eyepieces

HEAD

All models have 30° inclined Ø 30 mm tubes. The interpupillary distance is adjustable between 48 to 75 mm. All models have a ±5 diopter adjustment on the left tube. All heads are 360° rotatable and secured with a screw. The trinocular head has a fixed light path beam splitter (50:50) and generates an erect image

NOSEPIECE

Reversed quadruple nosepiece on ball bearings.
Slot for analyzer (BB.9602)

OBJECTIVES - 45 MM PARFOCAL

All microscopes are equipped with plan and plan IOS (infinity corrected) objectives. Optional 20x/0.40 and S60x/0.85 objectives are also available. The S40x, S60x and S100x objectives are spring loaded

All optics are anti-fungus treated and anti-reflection coated for maximum light throughput

FOCUSING

Coaxial coarse and fine adjustments with 200 graduations. Precision 1.5 µm per graduation, 0.3 mm per rotation. Total travel range is approximately 28 mm. Supplied with an adjustable rack stop to prevent damage to sample and objectives. The coarse adjustments are equipped with friction control

STAGE

Rackless 150 x 140 mm stage with mechanical 75 x 30 mm X-Y translation stage

CONDENSER

Height adjustable Abbe condenser N.A. 1.25 with iris

ILLUMINATION NeoLED

All models are supplied with an adjustable 3 W NeoLED™ illumination system for increased light output. Integrated 100-240V power supply

ANTI-THEFT SLOT

At the back of the microscope a Kensington Security slot is placed, which can be used to secure the instrument from theft

PACKAGE CONTENT

Supplied with power cord, dust cover, a spare fuse, user manual and 5 ml immersion oil and white filter, for on lamp house. All packed in a polystyrene box



● *BB.9900 Aluminum case*



● *AE.9919 Nylon bag*

MODELS	Bino	Trino	4x/10x/S40x/S100x plan objectives	4x/10x/S40x/S100x plan IOS objectives	Rackless mechanical X-Y stage	Neo LED	Weight (kg)
BB.1152-PL	•		•		•	•	5.4
BB.1153-PL		•	•		•	•	5.5
BB.1152-PLi	•			•	•	•	5.4
BB.1153-PLi		•		•	•	•	5.5

ACCESSORIES AND SPARE PARTS

EYEPIECES

Ø 30 mm tube

BB.6010 WF (wide field) 10x/20 mm eyepiece
BB.6110 WF 10x/20 mm micrometer eyepiece with focusable lens, Ø 30 mm tube
BB.6015 WF 15x/15 mm eyepiece
BB.6020 WF 20x/11 mm eyepiece
BB.6099 Pair of eyecups

OBJECTIVES

Plan PL, 45 mm parfocal

BB.8804 4x/0.10 PL objective. WD 17.92 mm
BB.8810 10x/0.25 PL objective. WD 2.04 mm
BB.8820 20x/0.40 PL objective. WD 1.20 mm
BB.8840 540x/0.65 PL objective. WD 0.65 mm
BB.8860 560x/0.80 PL objective. WD 0.19 mm
BB.8800 Plan S100x/1.25 oil immersion objective. WD 0.18 mm

Plan PLi, IOS infinity corrected, 45 mm parfocal

BB.7204 4x/0.10 PLi objective. WD 7.18 mm
BB.7210 10x/0.25 PLi objective. WD 4.80 mm
BB.7220 20x/0.40 PLi objective. WD 5.27 mm
BB.7240 540x/0.65 PLi objective. WD 0.68 mm
BB.7260 560x/0.85 PLi objective. WD 0.50 mm
BB.7200 5100x/1.25 oil immersion PLi objective. WD 0.20 mm

WD = working distance

MISCELLANEOUS

BB.9602 Analyzer in slider, Ø 25 mm. Fits in nosepiece
BB.9707 White filter Ø 32 mm. Fits in filter holder
BB.9732 Polarization filter, 32 mm diameter. Fits in filter holder
BB.9880 Köhler attachment
BB.9993 3 W NeoLED™ replacement unit
AE.5227 Fuse 1 A 250 V, 10 pieces
BB.9900 Aluminum case
AE.9919 Nylon bag for BioBlue.Lab, 58 (h) x 32 (w) x 24 (d)

CAMERA ACCESSORIES

AE.5130 Universal SLR camera adapter with 2x projection lens for 23.2 mm tubes. Needs T2 adapter
AE.5040 T2 adapter for Canon EOS SLR digital camera
AE.5025 T2 adapter for Nikon D SLR digital camera

DISPOSABLES

PB.5155 Microscope slides 76 x 26 mm, ground edges, 50 pieces
PB.5157-W Microscope slides 76 x 26 mm, ground edges. White frosted side, 50 pieces per pack
PB.5157-B Microscope slides 76 x 26 mm, ground edges. Blue frosted side, 50 pieces per pack
PB.5160 Microscope slides 76 x 26 mm with cavity, ground edges. 10 pieces per pack
PB.5165 Cover glasses 18 x 18 mm, thickness 0.13-0.17 mm, 100 pieces
PB.5168 Cover glasses 22 x 22 mm, thickness 0.13-0.17 mm, 100 pieces
PB.5245 Lens cleaning paper, 100 sheets per pack
PB.5255 Immersion oil, n = 1.482 (25 ml)
PB.5274 Isopropyl alcohol 99% (200 ml)
PB.5275 Cleaning kit: lens cleaning fluid, lint free lens tissue, brush, air blower, cotton swabs
PB.5276 Microscope maintenance and servicing kit, 16 pieces: cleaning brush, screwdriver set of 6, air blower, 3 Allen keys, 1.5, 2, 2.5 mm, lens cleaning fluid 20 ml, cleaning cloth 140 x 140 mm, 100 lens tissue sheets, tube of maintenance grease, 10 ml bottle of oil, packed in a nice toolbox



iscope

NeoLED

iScope

The iScope is available in various configurations suitable for life and biomedical sciences, high schools, universities but also for routine medical applications

Besides the brightfield contrast method, configurations for phase contrast, cardioid mirror darkfield, basic polarization and several epi-illumination sources for fluorescence applications can be used. iScope models with multiheads are also available for teaching purposes

product information



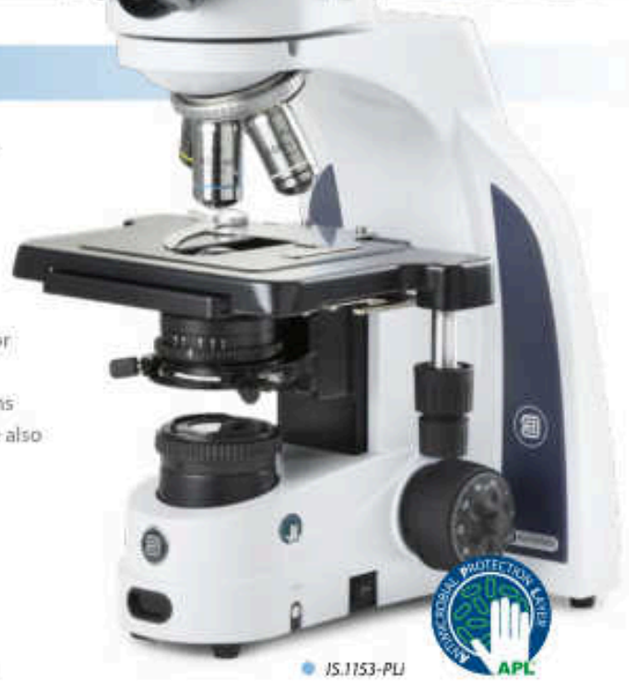

IS.1153-PLi



iScope tilting head

HIGHLIGHTS

- EWF 10x/22 mm and EWF 10x/20 mm eyepieces
- Binocular and trinocular models
- Smart Light Control (SLC) system available
- Multihead and face-to-face dual head systems
- Optional tilting head
- Quintuple reversed nosepiece
- E-plan, plan and plan phase objectives
- E-plan, plan and plan phase IOS objectives
- 156 x 138 mm stage
- 187/230 x 140 mm rackless stage
- Cardioid mirror darkfield condenser with 5 W NeoLED™ illumination
- 3 W NeoLED™ Köhler illumination
- iCare sensor for energy saving
- CSS - Cable Storage System
- 10 Years warranty

SPECIFICATIONS

EYEPIECES

- Extended plan wide field EWF 10x/20 mm eyepieces with 20 mm field of view and adjustable diopter on the left eyepiece for non-infinity corrected systems (Ø 23.2 mm tube. Tube length 160 mm)
- Extended plan wide field EWF 10x/22 mm eyepieces with 22 mm field of view and adjustable diopter on both eyepieces for infinity corrected IOS plan and plan phase systems and adjustable diopter on the left tube for EPLi systems (Ø 30 mm tube. Tube length 200 mm)

HEAD

Binocular and trinocular Siedentopf type heads with 30° inclined tubes. Interpupillary distance from 48 to 76 mm.
The trinocular head of the plan infinity corrected models (IS.1153-PLi) has an optical path selector (100:0 / 50:50) and ± 5 diopter adjustments on both Ø 30 mm tubes.
The trinocular head of the E-plan infinity corrected models (IS.1153-EPLi) has a fixed built-in beam splitter (50:50) and ± 5 diopter adjustment on the Ø 30 mm left tube.
The trinocular head of the E-plan finite models (IS.1153-EPL) has a fixed built-in 50:50 beam splitter and one ± 5 diopter adjustment on the Ø 23.2 mm left tube. A unique rotating system allows the ergonomic positioning of both tubes in a high (431 mm) and in a low position (397 mm). The trinocular head comes with a Ø 23.2 mm photo port

ERGONOMIC TILTING HEAD

Optional ergonomic 5° to 35° tilting head supplied with EWF 10x/22 mm eyepieces, interpupillary distance 48-75 mm and optional photo attachment with standard Ø 23.2 mm tube (only infinity corrected models)
To order an iScope with tilting head use reference IS.1158-xxx
To order an iScope with tilting head and photo tube attachment use reference IS.1159-xxx

FACE-TO-FACE HEADS

The iScope can be supplied with two heads in a face-to-face configuration, allowing simultaneous observation by two operators. The Ø 30 mm tubes of the head are equipped with EWF 10x/20 mm eyepieces. Both heads have two diopter adjustments. Only available for the model with plan infinity corrected objectives (IS.1154-PLi/T). The face-to-face head is equipped with a 2-color laser pointer

MULTIHEAD SYSTEM

The iScope can be extended with a unique multihead system for in total two, three or five heads, allowing simultaneous observation of specimens.
The central attachment is equipped with a joystick to move a green and red laser pointer across the entire field of view of all heads. Configurations with one, two or four additional viewing binocular heads, 30° inclined tubes and plan 4x, 10x, S40x, S100x oil immersion infinity corrected IOS objectives. All heads are equipped with extended wide field plan EWF 10x/22 mm eyepieces
(references: IS.1156-PLi-x, x = total number of heads)

OBJECTIVES - 45 MM PARFOCAL

E-plan EPL	4x/0.10	10x/0.25	20x/0.40*	S40x/0.65		S100x/1.25 oil
E-plan EPLi IOS	4x/0.10	10x/0.25		S40x/0.65		S100x/1.25 oil
Plan PLi IOS	4x/0.10	10x/0.25	20x/0.40*	S40x/0.65	S60x/0.85*	S100x/1.25 oil
Plan phase PLPH		10x/0.25	20x/0.40	S40x/0.65		S100x/1.25 oil
Plan phase PLPHi IOS		10x/0.25	20x/0.40	S40x/0.65		S100x/1.25 oil

** optional*
All optics are anti-fungus treated and anti-reflection coated for maximum light throughput

NOSEPIECE

Revolving quintuple reversed nosepiece for max. five objectives

STAGE

The iScope can be equipped with three types of stages:

- 156 x 138 mm stage equipped with integrated 79 x 52 mm mechanical X-Y stage
- 187/230 x 140 mm rackless stage equipped with double slide holder and integrated 79 x 52 mm mechanical X-Y stage. The iScope rackless stage has no protruding parts, enables smoother movements and is safer

The iScope can be supplied with a heating stage which can be set up to 50° Celsius by a PID temperature controller. Only available with newly purchased microscopes. Higher temperatures can be achieved on special request

CONDENSER FOR BRIGHTFIELD

The standard height adjustable Abbe N.A. 1.25 condenser for brightfield accepts sliders with phase annuli suitable for plan phase 10x/20x or S40x/S100x oil immersion IOS objectives for economical phase contrast. With magnification indication. A slider with a simple dark stop for darkfield up to 400x magnification is also available

CONDENSER FOR ZERNIKE PHASE CONTRAST

An optional height adjustable Zernike NA. 1.25 phase contrast disc condenser with plan phase 10/20/S40x and S100x oil immersion objectives and darkfield stop position for darkfield contrast up to 400x magnification. Supplied with alignment telescope and green filter

CONDENSER FOR DARKFIELD

A state-of-the-art condenser equipped with reflective cardioid mirrors, a high powered 3 W LED (adjustable intensity) and a S100x oil objective with built-in iris diaphragm enable a real 1000x magnification darkfield solution

FOCUSING

Coaxial coarse and fine adjustments, 200 graduations, 1 µm per graduation, 200 µm per rotation, total travel range is approximately 24 mm. Supplied with an adjustable rack stop to prevent damage to sample and objectives. The coarse adjustments are equipped with friction control

NEOLED™ ILLUMINATION

3 W adjustable Köhler NeoLED™ diascopic illumination with internal 100-240 V power supply. The innovative NeoLED™ design offers larger apertures, allowing the optical system of the iScope microscope to produce images at higher resolutions, very close to the theoretical diffraction limit of the optics. Other benefits of the NeoLED™ is the low energy consumption, no heating and a long operating life span. The Köhler illumination on models with IOS plan and plan phase infinity corrected system provides high contrast and a maximum achievable resolving power of the optics. Also available for other models as option

SMART LIGHT CONTROL SYSTEM

- The Smart Light Control (SLC) automatically memorises the last used illumination intensity brightness for each individual objective. Simply rotate the nosepiece to the next objective and the SLC will instantly adjust the illumination intensity to your desired level
- Light intensity can be locked to stop intensity changing by simply pressing the control button twice
- The LCD screen at the front of the microscope informs the user of the magnification and light intensity settings of the microscope, as well as the sleep and locking modes when activated
- Push the button once to enter/leave sleep mode and push the button twice to enter/leave lock mode

ICARE SENSOR

The unique iCare Sensor is developed to avoid unnecessary loss of energy. The illumination of the microscope automatically switches off shortly after microscopists step away from their position. Not available for darkfield models

CSS – CABLE STORAGE SYSTEM

iScope allows users to easily insert the power cable into the back of the instrument, which enables easy storage. The integrated carrying grip at the back of the microscope ensures safe transportation of the microscope

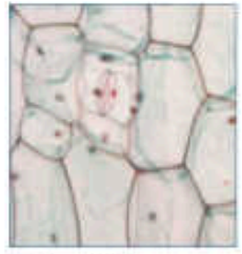

Normal LED

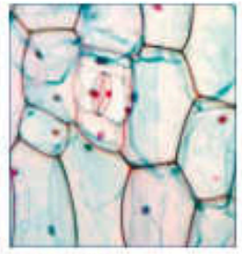

NeoLED™

PACKAGE CONTENT

Supplied with power cord, dust cover, a spare fuse, user manual and 5 ml immersion oil for models with S100x oil objective. Phase contrast models are supplied with green filter and alignment telescope. All packed in polystyrene boxes



iScope cable storage system



iCare sensor

ISCOPE FOR LIFE SCIENCE (NON-INFINITY MODELS)

MODELS	Bino	Trino	Phase contrast	EWF 10x20 mm	E-plan 4x/10x/ 40x/100x objectives	Plan phase 10x/20x/ 40x/100x objectives	Mechanical stage
IS.1152-EPL	•			•	•		•
IS.1153-EPL		•		•	•		•
IS.1152-PLPH	•		•	•		•	•
IS.1153-PLPH		•	•	•		•	•

ISCOPE FOR LIFE SCIENCE (INFINITY MODELS)

MODELS	Bino	Trino	Phase contrast	EWF 10x22 mm	E-plan IOS 4x/10x/ 40x/100x objectives	Plan IOS 4x/10x/ 40x/100x objectives	Plan phase IOS 10x/20x/ 40x/100x objectives	Mechanical rackless stage	Smart Light Control	Köhler LED
IS.1152-EPLi	•			•	•			•		
IS.1152-EPLi/SLC	•			•	•			•	•	
IS.1153-EPLi		•		•	•			•		
IS.1153-EPLi/SLC		•		•	•			•	•	
IS.1152-PLi	•			•*		•		•		•
IS.1152-PLi/SLC	•			•*		•		•	•	•
IS.1153-PLi		•		•*		•		•		•
IS.1153-PLi/SLC		•		•*		•		•	•	•
IS.1152-PLPHi	•		•	•*			•	•	•	•
IS.1153-PLPHi		•	•	•*			•	•	•	•

** Two tubes with diopter adjustments*
Some models are also available as in vitro diagnostic medical devices class A - (EU) 2017/746. Contact your Euromex dealer

ISCOPE FOR LIFE SCIENCE (FACE-TO-FACE DUAL HEAD SYSTEM)

MODELS	Total users	Binocular EWF 10x/20 mm	Trinocular EWF 10x/20 mm	Plan IOS 4x/10x/ 40x/100x objectives	Mechanical rackless stage	iCare sensor	Köhler LED
IS.1154-PLi/T	2	1x	1x	•	•	•	•

Also available as in vitro diagnostic medical devices class A - (EU) 2017/746. Contact your Euromex dealer

ISCOPE FOR LIFE SCIENCE (INFINITY - MULTIHEAD SYSTEMS)

MODELS	Total users	Binocular	Trinocular	EWF 10x22 mm	Plan IOS 4x/10x/ 40x/100x objectives	Mechanical rackless stage	Köhler LED
IS.1156-PLi2	2	1x	•	•	•	•	•
IS.1156-PLi3	3	2x	•	•	•	•	•
IS.1156-PLi5	5	4x	•	•	•	•	•

Some models are also available as in vitro diagnostic medical devices class A - (EU) 2017/746. Contact your Euromex dealer

ISCOPE FOR LIFE SCIENCE (INFINITY - ERGONOMIC TILTING HEAD)

MODELS	Bino	Photo port	Phase contrast	EWF 10x22 mm	E-plan IOS 4x/10x/ 40x/100x objective	Plan IOS 4x/10x/ 40x/100x objectives	Plan phase IOS 10x/20x/ 40x/100x objectives	Mechanical rackless stage	Köhler LED
IS.1158-EPLi	•			•	•			•	
IS.1159-EPLi	•	•		•	•			•	
IS.1158-PLi	•			•		•		•	•
IS.1159-PLi	•	•		•		•		•	•
IS.1158-PLPHi	•		•	•			•	•	•
IS.1159-PLPHi	•	•	•	•			•	•	•

Some models are also available as in vitro diagnostic medical devices class A - (EU) 2017/746. Contact your Euromex dealer

ISCOPE FOR LIFE SCIENCE (DARKFIELD CONTRAST APPLICATION)

MODELS	Trino	Darkfield	EWF 10x20 mm	EWF 10x22 mm	E-plan 4x/10x/ 40x/100x objectives	Plan IOS 4x/10x/ 40x/100x objectives	Mechanical rackless stage	Köhler LED
IS.1153-PLi/DFi	•	•		•		•	•	•
IS.1153-EPL/DF	•	•	•		•			

Models for darkfield observation IS.1152-PLi/DF is supplied with a state-of-the-art condenser equipped with reflective cardioid mirrors and a high powered 3 W LED. Together with a S100x oil objective with built-in iris diaphragm real 1000x magnification darkfield solution can be achieved. All other specifications are identical to models IS.1152-PLi and IS.1153-PLi

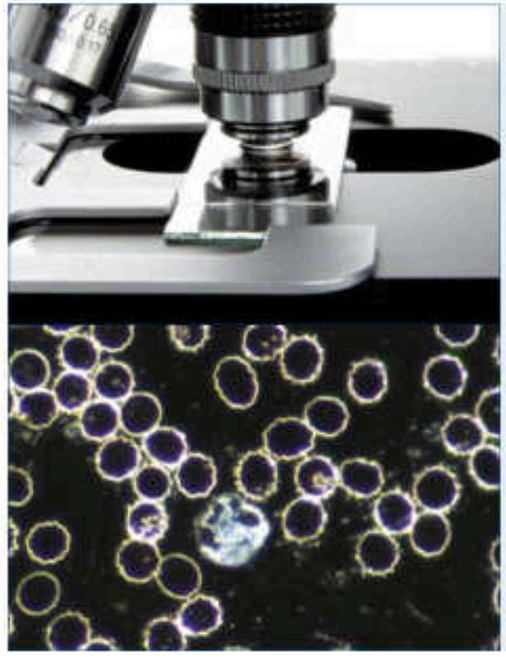

DARKFIELD

Darkfield contrast is used in particular for unstained samples. The produced image has the appearance of a dark, almost black background with highlighted bright objects on it, producing very recognizable, often even called spectacular images. These objects, because they are unstained, are hard to see with brightfield contrast. The applications are mostly biological samples, smears from tissue culture or water-borne, single-celled organisms

In the past darkfield microscopy was limited due to low light levels. Euromex has overcome this issue by developing very strong illumination methods, without causing damage to the samples. A 3 W build in high power LED is used to power the especially designed cardioid-shaped lens condenser system. Combined with a special 100x objective with built-in iris diaphragm for extra contrast this system is unique in its class

ACCESSORIES AND SPARE PARTS

EYEPIECES

Ø 23.2 mm tube

IS.6010 EWF 10x/20 mm eyepiece
IS.6010-P EWF 10x/20 mm eyepiece with pointer
IS.6010-C EWF 10x/20 mm eyepiece with crosshairs
IS.6010-CM EWF 10x/20 mm eyepiece with 10/100 micrometer and cross
IS.6015 WF 15x/16 mm eyepiece
IS.6099 Pair of eyecups

EYEPIECES

Ø 30 mm tube

IS.6210 EWF 10x/22 mm eyepiece
IS.6210-C EWF 10x/22 mm eyepiece with crosshairs
IS.6210-P EWF 10x/22 mm eyepiece with pointer
IS.6210-CM EWF 10x/22 mm eyepiece with 10/100 micrometer and crosshairs
IS.6212 WF 12.5x/17 mm eyepiece
IS.6215 WF 15x/16 mm eyepiece
IS.6220 WF 20x/12 mm eyepiece
IS.6310 EWF 10x/20 mm eyepiece
IS.6310-C EWF 10x/20 mm eyepiece with crosshairs
IS.6310-CM EWF 10x/20 mm eyepiece with 10/100 micrometer and crosshairs
IS.6299 Pair of eyecups infinity models

EWF = extended wide field

OBJECTIVES

E-plan EPL, 45 mm parfocal

IS.7104 4x/0.10 EPL objective. WD 15.2 mm
IS.7110 10x/0.25 EPL objective. WD 5.5 mm
IS.7120 20x/0.40 EPL objective. WD 3.5 mm
IS.7140 S40x/0.65 EPL objective. WD 0.45 mm
IS.7160 S60x/0.85 EPL objective. WD 0.19 mm
IS.7100 S100x/1.25 EPL oil objective. WD 0.13 mm

Plan phase contrast PLPH, 45 mm parfocal

IS.7710 10x/0.25 PLPH objective. WD 12.2 mm
IS.7720 20x/0.40 PLPH objective. WD 5 mm
IS.7740 S40x/0.65 PLPH objective. WD 0.37 mm
IS.7700 S100x/1.25 PLPH oil bjective. WD 0.13 mm

E-plan infinity corrected EPLi, IOS 45 mm parfocal

IS.8804 4x/0.10 EPLi objective. WD 15.4 mm
IS.8810 10x/0.25 EPLi objective. WD 5.8 mm
IS.8840 S40x/0.65 EPLi objective. WD 0.43 mm
IS.8800 S100x/1.25 EPLi oil objective. WD 0.13 mm

Plan infinity corrected PLi, IOS 45 mm parfocal

IS.7202 2x/0.05 PLi objective, WD 18.3 mm. Best to be used together with swing-out condenser
IS.7204 4x/0.10 PLi objective. WD 15.4 mm
IS.7210 10x/0.25 PLi objective. WD 10 mm
IS.7220 20x/0.40 PLi objective. WD 5.1 mm
IS.7240 S40x/0.65 PLi objective. WD 0.54 mm
IS.7260 S60x/0.85 PLi objective. WD 0.14 mm
IS.7200 S100x/1.25 PLi oil objective. WD 0.13 mm
IS.7200-I S100x/1.25 Super Contrast PLi oil objective with built-in iris diaphragm. WD 0.13 mm. Suitable for darkfield contrast
IS.7200-W S100x/1.10 PLi water immersion objective. WD 0.14 mm

Plan Fluarex infinity corrected PLFi, IOS 45 mm parfocal 0.17 mm coverglass correction

IS.7404 4x/0.13 PLFi objective. WD 16.4 mm
IS.7410 10x/0.30 PLFi objective. WD 12 mm
IS.7420 20x/0.50 PLFi objective. WD 1.4 mm
IS.7440 S40x/0.75 PLFi objective. WD 0.34 mm
IS.7400 S100x/1.30 PLFi oil objective. WD 0.2 mm

Plan phase contrast infinity corrected PLPHi, IOS 45 mm parfocal

IS.8910 10x/0.25 PLPHi objective. WD 10.2 mm
IS.8920 20x/0.40 PLPHi objective. WD 5.1 mm
IS.8940 S40x/0.65 PLPHi objective. WD 0.5 mm
IS.8900 S100x/1.25 PLPHi oil objective. WD 0.13 mm

WD = working distance

CONDENSERS

IS.9102 Standard Abbe condenser 1.25 NA with slot for darkfield and phase contrast sliders
IS.9105 Swing-out 0.9/1.25 N.A. condenser

**NA = numerical aperture*

PHASE CONTRAST ATTACHMENTS

IS.9124 Zernike phase contrast set including rotating disc with PLPH 10/20/40/100, brightfield and darkfield position
IS.9127 Zernike phase contrast set including rotating disc with PLPH 10/20/40/100, brightfield and darkfield position
IS.9148 Alignment telescope for phase contrast, Ø 30 mm tube
IS.9149 Alignment telescope for phase contrast, Ø 23.2mm tube
IS.9160 Phase contrast slider set with 10x and S40x PLPH objectives and annuli for 10/S40x PLPH objectives. Also suitable for optional 20x PLPH objective
IS.9161 Phase contrast slider set with 20x and S100x oil PLPH objectives and annuli for 20x/S100x oil PLPH objectives
IS.9162 Phase contrast slider set with 10x and S40x PLPHi IOS infinity corrected objectives and annuli for 10x/S40x PLPHi IOS infinity corrected objectives. Also suitable for optional 20x PLPHi infinity corrected objective
IS.9163 Phase contrast slider set with 20x and S100x oil PLPHi IOS infinity corrected objectives and annuli for 20x/S100x oil PLPHi IOS infinity corrected objectives

MISCELLANEOUS

IS.9170 Slider with darkfield stop, up to 400x
IS.9194 Slider with phase contrast annuli for S40x phase contrast objective
IS.9880 Köhler attachment
IS.4300 Aluminum transport case for iScope
AE.9919 Nylon carry bag for iScope (29 x 53 x 23)
AE.3684 Glass fuses 500 mA 250 V, 10 pieces
AE.5168-I Heating stage series with controller, only with new microscopes
IS.9993 NeoLED™ replacement unit
IS.9994 Halogen-NeoLED™ replacement unit

POLARIZATION ATTACHMENTS

IS.9600 Polarization filter 45 mm for lamphouse
IS.9601 Polarization set: simple rotating polarizer for lamphouse and fixed polarizer, mounted under head (not suitable for SLC models)
IS.9626 Polarization filter for mounting under the head (not suitable for SLC models)

FILTERS

IS.9700 Blue filter 45 mm for lamphouse
IS.9702 Green filter 45 mm for lamphouse
IS.9704 Yellow filter 45 mm for lamphouse
IS.9706 White opaque filter 45 mm for lamphouse

CAMERA ACCESSORIES

IS.9800 single photo tube attachment with one 23.2 mm tube for ergonomic tilting head of iScope infinity systems
AE.5130 Universal SLR adapter with built-in 2x lens for standard 23.2 mm tube. Needs T2 adapter
AE.5025 T2 adapter for Nikon D SLR digital camera
AE.5040 T2 adapter for Canon EOS SLR digital camera

DISPOSABLES

PB.5155 Microscope slides 76 x 26 mm, ground edges, 50 pieces per pack
PB.5157-W Microscope slides 76 x 26 mm, ground edges and frosted side white color, 50 pieces per pack
PB.5157-B Microscope slides 76 x 26 mm, ground edges and frosted side blue color, 50 pieces per pack
PB.5160 Microscope slides 76 x 26 mm with cavity, ground edges. 10 pieces per pack
PB.5165 Coverglasses 18 x 18 mm, 0.13 - 0.17 mm, 100 pieces

PB.5168	Coverglasses 22 x 22 mm, 0.13 - 0.17 mm, 100 pieces
PB.5245	Lens cleaning paper, 100 sheets per pack
PB.5255	Immersion oil, 25 ml. Refraction index n = 1.515
PB.5274	Isopropyl alcohol 99%, 200 ml
PB.5275	Cleaning kit: lens fluid, lint free lens tissues/ paper, brush, air blower, cotton swabs
PB.5276	Microscope maintenance and servicing kit, 16 pieces: cleaning brush, screwdriver set of 6, air blower, 3 Allen keys, 1.5, 2, 2.5 mm, lens cleaning fluid 20 ml, cleaning cloth 140 x 140 mm, 100 lens tissue sheets, tube of maintenance grease, 10 ml bottle of oil, packed in a nice toolbox

See chapter 8



IS.1152-PLi + IS.DIGI-ADD

DIMENSIONS

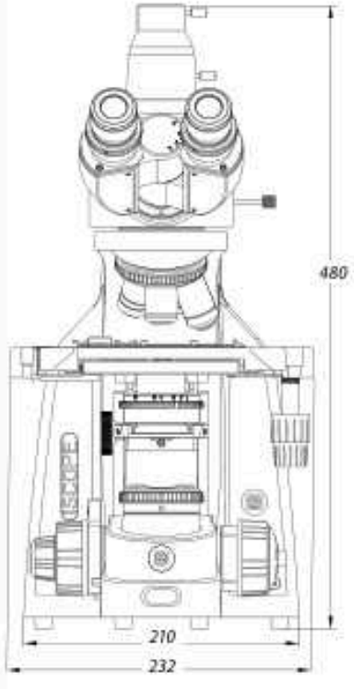

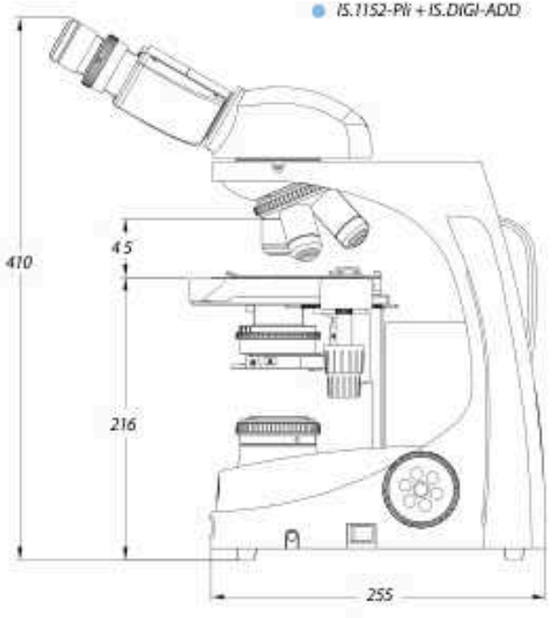

euromex.academy
You Tube



IS.1153-EPLi/SLC



IS.1159-EPLi



IS.1156-PLi-S



IS.1154-PLi /T



IS.1153-EPL-DF



Achios-X Observer

advanced performance in histopathology, cytology, dermatopathology and forensic pathology



Achios-X Observer | Achios-X Observer fluorescence | Achios-X Observer metallurgical | Achios-X Inverso | Achios-X Inverso fluorescence

The Achios-X Observer is designed to provide pathologists with exceptional clarity and precision, offering a wide field of view for detailed sample examination. Its advanced optical system - combined with high-intensity color-adjustable LED light source - ensures consistent, high-quality illumination. Whether analyzing biopsy or resection samples in **histopathology**, studying individual cells in **cytology**, diagnosing skin disorders in **dermatopathology**, or investigating causes of death in **forensic pathology**—the Achios-X Observer delivers performance that meets the highest standards in modern microscopy



Achios-X
observer

NeoLED™

Achios-X Observer

for advanced life science applications

Experience optimal comfort and cutting-edge performance with the Achios-X Observer, an ergonomic masterpiece featuring a state-of-the-art optical system. Tailored to meet the demands of advanced Life Science applications such as cytology and anatomopathology



- *AX.1153-PLi*

product information



AX.1153-PLi
431 (h) x 257 (w) x 454 mm (d) | 11.2 kg
AX.1158-PLi
431 (h) x 257 (w) x 454 mm (d) | 11.2 kg

HIGHLIGHTS

- **Versatile and evolutive microscopes**
- **Extra Wide field WF 10x/22 mm, Ø 30 mm**
- **Revolving quintuple or sextuple reversed nosepiece**
- **infinity corrected 60 mm achromatic Plan, Plan Phase or Plan Semi-Apochromatic EIS objectives**
- **Low positioned stage adjustment knobs**
- **3 W NeoLED™ with adjustable color temperature**
- **Smart Light Control (SLC)**

See chapter 8



- *AX.1152-Pli + AX.DIGI-ADD*

SPECIFICATIONS

EYEPIECES

- EWF 10x/22 mm eyepiece with diopter adjustment
- EWF 10x/25 mm eyepiece with diopter adjustment (optional)

HEADS

- Standard Siedentopf trinocular with 30° inclined tubes. A 0.5x c-mount adapter is included (a 1x is optional)
- Ergonomic tilting head (0° - 35°). A 23.2 mm phototube is included. Several c-mount adapters are available
- Face-to-face dual head (optional)
- Multi-head systems with 2, 3 or 5 heads (optional)
- Head for attaching camera and screen

OBJECTIVES - 60 MM PARFOCAL

- infinity corrected achromatic Plan EIS objectives*
- infinity corrected achromatic Plan Phase EIS objectives*
- infinity corrected achromatic Plan Semi-Apochromatic EIS objectives*

**M25 mounting thread*



- *Holds two slides*
- *Interchangeable focus knobs*





STAGE

The Achios-X Observer comes complete with a generously sized, hard coated, rackless mechanical X-Y stage, meticulously designed for enhanced safety

- Free from any sharp edges protruding from the microscope's sides, this stage ensures a secure and worry-free experience
- Suitable for two slides and allows single handed placement of slides
- Measurements: stage, 230 x 150 mm X-Y and mechanical X-Y stage, 78 x 54 mm

CONDENSERS

Depending on the configuration, the Achios-X Observer is supplied with the standard Abbe condenser, Zernike phase condenser (includes telescope and green filter), swing-out Abbe condenser, darkfield condenser (dry or oil immersion)

ILLUMINATION

The Köhler illumination of the Achios-X Observer provides the most uniformly illuminated and bright field of view

NOSEPIECE

Experience the ease of an intuitive quintuple or an optional sextuple nosepiece on ball- bearings, equipped with gripped ring for effortless and precise rotation

LIGHT AND COLOR TEMPERATURE CONTROL

The Achios-X Observer introduces Smart Light Control. This intelligent function memorizes the last used light intensity level for each objective. The color temperature of the NeoLED™ light source can be adjusted and stored. This innovation not only heightens comfort but also saves valuable time during routine magnification shifts. The eco-friendly NeoLED™ light source is both environmentally conscious and built to endure

CSS – CABLE STORAGE SYSTEM

Allows users to easily stow away excess cable length into the back of the instrument during operation and to roll up the power cable for easy storage

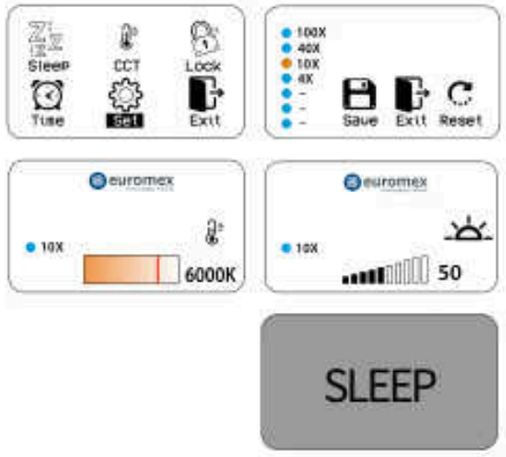



Smart Light Control

CARRYING GRIP

The integrated carrying grip at the back of the microscope ensures safe transportation of the microscope

NEOLED™

The innovative NeoLED™ design is a combination of a custom LED and a specially designed thin lens with a short focal length in order to obtain four main benefits:

- More oblique light from the NeoLED™ can be captured, which increases the light output significantly
- Less energy is required to achieve this level of light intensity
- The larger aperture of NeoLED™ allows the optical system of the microscope to produce images at higher resolutions, very close to the theoretical diffraction limit of the optics
- Super long life span, up to 50.000 hrs nominal, L70 norm

PACKAGING

Supplied with power cord, dust cover, screwdriver, user manual and 5 ml immersion oil for models supplied with a 100x objective



The back of the Achios-X Observer

MODELS	Bino	Trino	Ergo	eyepieces EW 10x/22 mm	Plan objectives 4/10/40 IOS	Plan objective 100x (oil) IOS	Plan Semi-Apo objectives 4/10/40 IOS	Plan Semi-Apo objective 100x (oil) IOS	Plan Phase objectives 10/20/40/100x (oil) IOS
AX.1052-PLi	•			•	•				
AX.1053-PLi		•		•	•				
AX.1058-PLi			•	•	•				
AX.1152-PLi	•			•	•	•			
AX.1153-PLi		•		•	•	•			
AX.1158-PLi			•	•	•	•			
AX.1052-APLi	•			•			•		
AX.1053-APLi		•		•			•		
AX.1058-APLi			•	•			•		
AX.1152-APLi	•			•			•	•	
AX.1153-APLi		•		•			•	•	
AX.1158-APLi			•	•			•	•	
AX.1152-PLPHi	•			•					•
AX.1153-PLPHi		•		•					•
AX.1158-PLPHi			•	•					•

Sextuple nosepiece is also available
Some models are also available as in vitro diagnostic medical devices class A - (EU) 2017/746
Contact your Euromex dealer

ACCESSORIES AND SPARE PARTS

EYEPIECES

Ø 30 mm tube

AX.6010 EWF 10x/22 mm eyepiece for Achios-X observer. With diopter adjustment

AX.6410 EWF 10x/25 mm eyepiece for Achios-X observer. With diopter adjustment

PLAN OBJECTIVES

Plan infinity corrected PLi, EIS 60 mm parfocal*

AX.7202 2x/0.06 PLi objective. WD 7.5 mm

AX.7204 4x/0.10 PLi objective. WD 30 mm

AX.7210 10x/0.25 PLi objective. WD 10.2 mm

AX.7220 20x/0.40 PLi objective. WD 10.2 mm

AX.7240 540x/0.65 PLi objective. WD 1.5 mm

AX.7260 560x/0.80 PLi objective. WD 1.5 mm

AX.7200 5100x/1.25 oil-immersion PLi objective. WD 0.3 mm

Plan Semi-Apochromatic Fluarex infinity corrected PL-SAFi, EIS 60 mm parfocal*

AX.7304 4x/0.15 PL-SAFi objective. WD 0.17 mm

AX.7310 10x/0.3 PL-SAFi objective. WD 15.8 mm

AX.7320 20x/0.5 PL-SAFi objective. WD 2.7 mm

AX.7340 540x/0.75 PL-SAFi objective. WD 1.35

AX.7300 5100x/1.25 oil-immersion PL-SAFi objective. WD 0.18 mm

Plan Phase infinity corrected PLPHi, EIS 60 mm parfocal*

AX.7710 10x/0.25 PLPHi objective. WD 10.2 mm

AX.7720 20x/0.40 PLPHi objective. WD 13. 4 mm

AX.7740 40x/0.65 PLPHi objective. WD 0.7 mm

AX.7700 100x/1.25 oil immersion PLPHi objective. WD 0.22 mm

WD = working distance

** M25 mm thread*

HEADS

AX.5302 Siedentopf binocular head with 30 degrees inclined tubes

AX.5313 Siedentopf trinocular head 100:0/0:100 with 30 degrees inclined tubes

AX.5700 Ergonomical Siedentopf trinocular head with tilting tubes and with 23.2 mm photo tube. ADD-ON option. Only with new microscopes

AX.5600 Face to Face attachment, two heads

AX.5602 Multi head two heads attachment

AX.5603 Multi head three heads attachment

AX.5605 Multi head 5 heads attachment

CONDENSERS

AX.9100 Standard Abbe Condenser

AX.9105 Swing-out Abbe Condenser

AX.9110 Darkfield condenser (Dry)

AX.9112 Darkfield condenser (Oil)

AX.9126 Zernike phase contrast set. Includes Zernike phase condenser and PLPHi 10/20/S40/S100-oil immersion objectives, telescope and green filter

CAMERA

AX.9850 C-mount adapter 0,5x for standard head

AX.9810 C-mount adapter 1x for standard head

DX.9810 C-mount with 1x magnification for C-mount camera (only for ergo head)

DX.9835 C-mount with high resolution relay 0.35x objective for 1/3 inch C-mount camera (only for ergo head)

DX.9850 C-mount with high resolution relay 0.50x objective for 1/2 inch C-mount camera (only for ergo head)

DX.9863 C-mount with high resolution relay 0.63x objective for 2/3 inch C-mount camera (only for ergo head)

MISCELLANEOUS

AX.9896 Nosepiece with six objectives

DX.9501-R Mechanical stage with Gorilla glass. Right handed

AX.9702 Green filter

AX.9148 Telescope

AX.9660 Simple polarization kit

euromex.academy



AX.9896 (objectives not included)

AX.9126 Zernike phase contrast set





AX.5513 Siedentopf trinocular head with 0:100/100:0 switch



Delphi-X observer

NeoLED

Delphi-X Observer

State-of-the-art microscopes for advanced life science applications. The outstanding optical performance of the Delphi-X Observer with 25 mm field of view and high numerical aperture of the plan 60 mm parfocal EIS objectives enable perfect observations, color rendering and at high resolving power. This is the perfect microscope for anatomy pathologists



- *DX.2153-APLi*

product information



DX.1153-PLI

HIGHLIGHTS

- **Trinocular model**
- **Sextuple reversed nosepiece with slot for DIC**
- **Super wide field SWF 10x/25mm eyepieces, Ø 30 mm tubes**
- **Enhanced infinity corrected EIS optical system**
- **Ergonomic tilting heads**
- **60 mm parfocal plan EIS objectives**
- **60 mm parfocal plan semi-apochromatic EIS objectives**
- **M25 objective thread mounting**
- **3 W NeoLED™ illumination**
- **100 W halogen illumination**
- **Face-to-face dual head system**
- **Multihead systems**
- **Brightfield, darkfield, phase contrast**
- **Differential Interference Contrast (DIC)**



- *Ergonomic tilting head*

SPECIFICATIONS

EYEPIECES

- Super wide field SWF 10x/25 mm, Ø 30 mm tubes
- Extended wide field EWF 10x/22 mm, Ø 30 mm tubes

STANDARD HEAD

Siedentopf trinocular head with 30° inclined tubes. Interpupillary distance adjustable between 47 and 78 mm. The trinocular standard head has an optical path selector (100:0 / 80:20 / 0:100). Diopter ± 5 adjustments on both eyepieces

ERGONOMIC TILTING HEAD

Optional ergonomic 0° to 35° tilting trinocular head supplied with SWF 10x/25 mm eyepieces, interpupillary distance between 47-78 mm and photo tube, standard with a Ø 23.2 mm tube. The trinocular tilting head has an optical path selector (100:0 / 80:20 / 0:100). Diopter ± 5 adjustments on both eyepieces. **Also available:** a Siedentopf ergonomic binocular tilting head. Only with purchase of a new microscope

FACE-TO-FACE DUAL HEAD SYSTEM

The Delphi-X Observer can be supplied with two binocular heads in a face-to-face configuration, allowing simultaneous observation by two operators. The main binocular head is equipped with super wide field SWF 10x/25 mm eyepieces and the second head with EWF 10x/22 mm eyepieces. A joystick enables the operator to move a green or red laser pointer across the entire field of view of both heads

MULTIHEAD SYSTEM

The Delphi-X-Observer can be extended with a multihead system for two, three, five or ten users. The central attachment is equipped with a joystick to move a green and red laser pointer across the entire field of view of all heads. The multihead systems with two, three or five heads and 30° inclined tubes are supplied with super wide field SWF 10x/25 mm eyepieces. The multihead systems with ten heads and 30° inclined tubes have the trinocular main head equipped with super wide field SWF 10x/25 mm eyepieces and the other nine binocular heads with extended wide field EWF 10x/22 mm eyepieces. The Delphi-X Observer multihead system with ten heads is supplied without the iCare sensor



DX.2156-PLi/10

NOSEPIECE

Revolving sextuple reversed nosepiece on ball-bearings with M25 objectives mounting threads

MOTORIZED MODEL

The Delphi-X Observer can be supplied with a motorized revolving sextuple reversed nosepiece together with a flip-down condenser. A precise step-motor allows the user to switch from objective by a simple push on a button. Another button allows quick switching between two preselected objectives. The electronics memorize automatically the light intensity levels for each objective after switching. The electronics also automatically flip out the front lens of the flip-down condenser when the 4x objective is used



Motorized nosepiece

OBJECTIVES

Plan (PLi)	2x/0.06*	4x/0.10	10x/0.25	20x/0.40	S40x/0.65	S50x/ 0.95 oil*	S60x/ 0.80*	S100x/1.25 oil	S100x/ 1.25 oil iris*
Plan phase (PLPHi)			10x/0.25	20x/0.40	S40x/0.65			S100x/1.25 oil	
Plan semi-apo (PLi Apo)		4x/0.13	10x/0.30	20x/0.50	S40x/0.75			S100x/1.30 oil	

All objectives are 60 mm parfocal and have a M25 mounting thread, all optics are anti-fungus treated and anti-reflection coated for maximum light throughput and all S40x, S50x, S60x and S100x oil objectives are spring loaded
** Optional*

ENHANCED INFINITY SYSTEM (EIS)

The enhanced infinity system (EIS) of the Delphi-X Observer consists of super wide field SWF 10x25 mm eyepieces, high numerical aperture, 60 mm parfocal objectives and a 200 mm focal length tube lens. This focal length tube lens reduces the angle of the light rays passing the optics and as a direct result it improves significantly the chromatic aberration corrections and contrast. The objectives with larger diameter enable much higher numerical apertures improving the overall resolving power of the optical system. For all these reasons the Delphi-X Observer offers superior optical performance for the most demanding applications

PLAN ACHROMATIC EIS OBJECTIVES (CLINICAL ROUTINE APPLICATIONS)

The Delphi-X Observer comes with plan achromatic 4x/0.10, 10x/0.25, 20x/0.40, S40x/0.65 and S100x/1.25 oil immersion infinity corrected EIS objectives

As an option available: 2x/0.06 , S50x/0.95 (oil immersion) and S60x/0.80

PLAN SEMI-APOCHROMATIC OBJECTIVES (ANATOMO- AND HISTOPATHOLOGY APPLICATIONS)

The Delphi-X Observer can also be supplied with plan semi-apochromatic Fluarex 4x/0.13, 10x/0.30, 20x/0.50, S40x/0.75 and S100x/1.30 oil immersion infinity corrected EIS objectives

PLAN PHASE CONTRAST OBJECTIVES

The Delphi-X Observer with phase contrast is supplied with Plan phase EIS 10x/0.25, 20x/0.40, s40x/0.65 and s100x/1.25 (oil immersion) infinity corrected EIS objectives

STAGE

The 190 x 152 mm stage has a 80 x 54 mm integrated right-handed mechanical X-Y stage. Comes with scratch-resistant Gorilla glass. Sapphire scratch-resistant glass is available on request. Left-handed mechanical X-Y stage is also available on request



Sextuple nosepiece

FOCUSING

Coaxial coarse and fine adjustment, 100 graduations, 1 µm precision, 100 µm per rotation, total travel range is approx. 35 mm. Supplied with an adjustable rack stop to prevent damage to sample and objectives. The coarse adjustments are equipped with friction control. The focusing knobs can be switched from left to right according to the user's preference

CONDENSER FOR BRIGHTFIELD

In height adjustable N.A. 0.90/1.25 Abbe swing-out condenser with numerical aperture identification marks. Models with a motorized nosepiece are supplied with a motorized condenser that automatically flips out the front lens of the condenser when the 4x objective is used

CONDENSER FOR PHASE CONTRAST

In height adjustable N.A. 1.25 Zernike phase contrast condenser with phase annuli for 10/20/40x and S100x-oil objectives. To be used with the phase contrast objectives

DIFFERENTIAL INTERFERENCE CONTRAST (DIC)

The Nomarski differential interference contrast technique helps to enhance contrast of samples and lets samples appear as three-dimensional objects. The equipment consist of a specific rotating DIC condenser, two Nomarski modified Wollaston prisms, a DIC slider for insertion into the slot of the sextuple reversed nosepiece and a polarizer

DIASCOPIC ILLUMINATION

Two Köhler illuminations are available for the Delphi-X Observer microscope:

- Diascopic intensity adjustable 3 W NeoLED™ Köhler illumination with internal 100-240 V power supply
- Diascopic intensity adjustable 100 W halogen Köhler illumination with internal 100-240 V power supply

The diascopic halogen illumination comes with two push-in/push-out neutral density filters for smooth attenuation of the light intensity for all kind of samples and with one Light Balancing Daylight filter (LBD). The diascopic NeoLED™ illumination comes with a frosted diffuse filter

LIGHT INTENSITY MEMORY FUNCTION (LIM)

LIM automatically saves preferred brightness while changing magnifications. It eliminates the need for adjusting lamp brightness when changing magnification. This allows maintaining preferred brightness at each magnification, thus improving user efficiency significantly and reducing eye strain. Standard on all models with a motorized nosepiece, for other models see ordering instructions below

For ordering Automatic light intensity memory function
Example: DX.1153-PLi = DX.1153-PLi/LIM model but with automatic light control

NEOLED™

The innovative NeoLED™ design is a combination of a custom LED and a specially designed thin lens with a short focal length in order to obtain three main benefits:

- More oblique light from the LED light source can be captured, which increases the light output significantly
- Less energy is required to achieve this level of light intensity
- The larger aperture of NeoLED™ allows the optical system to produce images at higher resolutions, very close to the theoretical diffraction limit of the optics

ICARE SENSOR

The unique iCare Sensor is developed to avoid unnecessary loss of energy. The illumination of the microscope automatically switches off shortly after the microscopist steps away from the microscope

CARRYING GRIP

The carrying grip at the back of the microscope ensures safe transportation of the microscope and the integrated tool & holder makes sure the right tool is always available

PACKAGE CONTENT

Supplied with power cord, dust cover, a spare fuse, user manual and 5 ml immersion oil. LED versions come with a white and yellow filter and halogen models come with a blue filter. All packed in a polystyrene box



iCare sensor



Nosepiece lowering attachment (DX.9887)



Eye-level riser (DX.9885)

DIMENSIONS

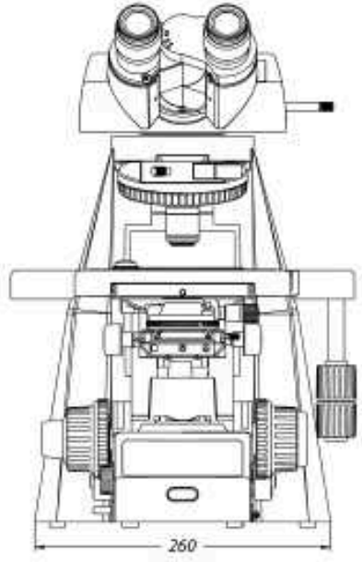

See chapter 8



DX.1152-PLi + DX.DIGI-ADD

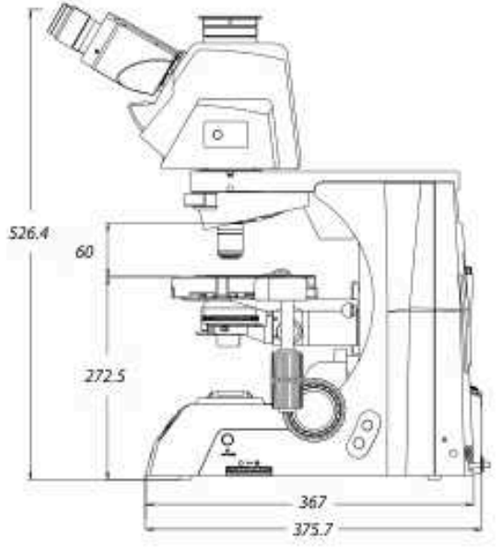

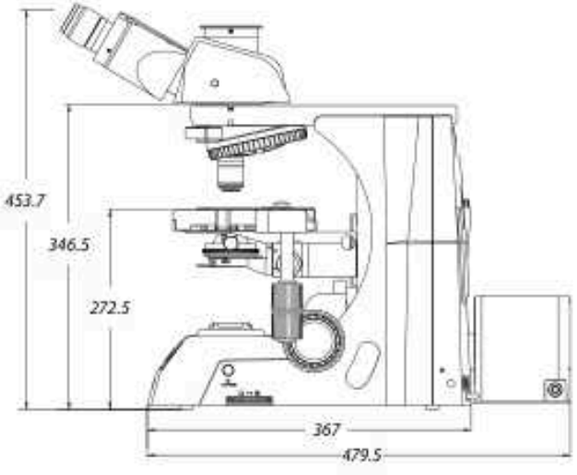

STANDARD MODELS

MODELS	Ergonomic tilting head	SWF 10x/25 mm eyepieces	Sextuple nosepiece	Plan 4/10/20/ S40 EIS objectives	S100x oil EIS objective	Plan semi-apo 4/10/20/S40/S100x oil EIS objectives	Plan phase 10/20/ S40/ S100x oil EIS objectives	3 W NeoLED™ Köhler	100 W 24 V halogen Köhler
DX.1053-PLi		•	•	•				•	
DX.1153-PLi		•	•	•	•			•	
DX.1158-PLi	•	•	•	•	•			•	
DX.1153-APLi		•	•			•		•	
DX.1158-APLi	•	•	•			•		•	
DX.1153-PLPHi		•	•				•	•	
DX.1158-PLPHi	•	•	•				•	•	
DX.2053-PLi		•	•	•					•
DX.2153-PLi		•	•	•	•				•
DX.2158-PLi	•	•	•	•	•				•
DX.2153-APLi		•	•			•			•
DX.2158-APLi	•	•	•			•			•
DX.2153-PLPHi		•	•				•		•
DX.2158-PLPHi	•	•	•				•		•

Some models are also available as in vitro diagnostic medical devices class A - (EU) 2017/746. Contact your Euromex dealer



DX.1153-PLi

MOTORIZED MODELS

MODELS	Ergonomic tilting head	SWF 10x/25 mm eyepieces	Sextuple nosepiece	Plan 4/10/20/ S40/ S100x oil EIS objectives	Plan semi-apo 4/10/20/ S40/S100x oil EIS objectives	3 W NeoLED™ Köhler	100 W 24 V halogen Köhler
DX.1173-PLi		•	•	•		•	
DX.1178-PLi	•	•	•	•		•	
DX.1173-APLi		•	•		•	•	
DX.1178-APLi	•	•	•		•	•	
DX.2173-PLi		•	•	•			•
DX.2178-PLi	•	•	•	•			•
DX.2173-APLi		•	•		•		•
DX.2178-APLi	•	•	•		•		•

For ordering more motorized models, substitute the third digit 5" of the model reference with the digit 7"
Example: DX.1173-PLi = DX.1153-PLi model but with motorized nosepiece, flip-down condenser and automatic light control
Some models are also available as in vitro diagnostic medical devices class A - (EU) 2017/746. Contact your Euromex dealer

FACE-TO-FACE DUAL HEAD SYSTEMS

MODELS	Total users	Trinocular head SWF 10x/25 mm eyepieces	Binocular head SWF 10x/22 mm eyepieces	Sextuple nosepiece	Plan 4/10/20/ S40/ S100x oil EIS objectives	Plan semi-apo Fluarex 4/10/20/ S40/S100x oil EIS objectives	Plan phase 10/20/S40/ S100x oil EIS objectives	3 W NeoLED™ Köhler	100 W 24 V halogen Köhler
DX.1154-PLi	2	1x	1x	•	•			•	
DX.1154-APLi	2	1x	1x	•		•		•	
DX.1154-PLPHi	2	1x	1x	•			•	•	
DX.2154-PLi	2	1x	1x	•	•				•
DX.2154-APLi	2	1x	1x	•		•			•
DX.2154-PLPHi	2	1x	1x	•			•		•

Some models are also available as in vitro diagnostic medical devices class A - (EU) 2017/746. Contact your Euromex dealer

MULTIHEAD SYSTEMS

MODELS	Total users	Trinocular head SWF 10x/25 mm eyepieces	Number of binocular heads	Binocular head SWF 10x/25 mm eyepieces	Sextuple nose-piece	Plan 4/10/20/ S40/ S100x oil EIS objectives	Plan semi-apo Fluarex 4/10/20/S40/ S100x oil EIS objectives	Plan phase 10/20/S40/ S100x oil EIS objectives	3 W NeoLED™ Köhler	100 W 24 V halogen Köhler
DX.1156-PLi/2	2	1x	1	•	•	•			•	
DX.1156-PLi/3	3	1x	2	•	•	•			•	
DX.1156-PLi/5	5	1x	4	•	•	•			•	
DX.1156-PLi/10	10	1x	9 [1]	•	•	•			•[2]	
DX.1156-APLi/2	2	1x	1	•	•		•		•	
DX.1156-APLi/3	3	1x	2	•	•		•		•	
DX.1156-APLi/5	5	1x	4	•	•		•		•	
DX.1156-APLi/10	10	1x	9 [1]	•	•		•		•[2]	
DX.1156-PLPHi/2	2	1x	1	•	•			•	•	
DX.1156-PLPHi/3	3	1x	2	•	•			•	•	
DX.1156-PLPHi/5	5	1x	4	•	•			•	•	
DX.1156-PLPHi/10	10	1x	9 [1]	•	•			•	•[2]	
DX.2156-PLi/2	2	1x	1	•	•	•				•
DX.2156-PLi/3	3	1x	2	•	•	•				•
DX.2156-PLi/5	5	1x	4	•	•	•				•
DX.2156-PLi/10	10	1x	9 [1]		•	•				•
DX.2156-APLi/2	2	1x	1	•	•		•			•
DX.2156-APLi/3	3	1x	2	•	•		•			•
DX.2156-APLi/5	5	1x	4	•	•		•			•
DX.2156-APLi/10	10	1x	9 [1]		•		•			•
DX.2156-PLPHi/2	2	1x	1	•	•			•		•
DX.2156-PLPHi/3	3	1x	2	•	•			•		•
DX.2156-PLPHi/5	5	1x	4	•	•			•		•
DX.2156-PLPHi/10	10	1x	9 [1]		•			•		•

[1] *The model with 9 binocular heads (10 users) is supplied with EWF 10x/22 mm eyepieces*
[2] *Supplied with 5 W NeoLED™ Köhler, without iCare sensor*
Some models are also available as in vitro diagnostic medical devices class A - (EU) 2017/746. Contact your Euromex dealer

ACCESSORIES AND SPARE PARTS

EYEPIECES

Ø 30 mm tube

DX.6010 Super wide field SWF 10x/25 mm eyepiece
DX.6010-CM Super wide field SWF 10x/25 mm eyepiece with micrometer and crosshairs
DX.6210 Super wide field SWF 10x/22 mm eyepiece
DX.6210-CM Super wide field SWF 10x/22 mm eyepiece with micrometer and crosshairs
DX.6012 Wide field WF 12.5x/17.5 mm eyepiece
DX.6015 Wide field WF 15x/16 mm eyepiece
DX.6020 Wide field WF 20x/12 mm eyepiece
DX.6099-L Eyecups for eyepiece
DX.6099-N Eyeshade for eyepieces

OBJECTIVES

Plan infinity corrected PLi, EIS 60 mm parfocal*

DX.7201 1x/0.04 PLi objective. WD 3.2 mm
DX.7202 2x/0.06 PLi objective. WD 7.5 mm
DX.7204 4x/0.10 PLi objective. WD 30 mm
DX.7210 10x/0.25 PLi objective. WD 10.2 mm
DX.7220 20x/0.40 PLi objective. WD 12 mm
DX.7240 S40x/0.65 PLi objective. WD 0.7 mm
DX.7260 S60x/0.80 PLi objectives. WD 0.3 mm
DX.7200 S100x/1.25 immersion PLi oil objective. WD 0.2 mm
DX.7200-I S100x/1.25 immersion PLi oil objective with built-in iris diaphragm. WD 0.2 mm
DX.7200-W S100x/1.25 PLi water immersion objective*. WD 0.2 mm

Plan Semi-Apochromatic infinity corrected PL-SAFi Fluarex, EIS 60 mm parfocal*

DX.7304 4x/0.13 PL-SAFi objective. WD 16.5 mm
DX.7310 10x/0.30 PL-SAFi objective. WD 8.1 mm
DX.7320 20x/0.50 PL-SAFi objective. WD 2.1 mm
DX.7340 S40x/0.75 PL-SAFi objective. WD 0.7 mm
DX.7300 S100x/1.30 immersion PL-SAFi oil objective. WD 0.15 mm

Plan Phase infinity corrected PLPHi, EIS 60 mm parfocal. M25 mm thread

DX.7710 10x/0.25 PLPHi objective. WD 10.2 mm
DX.7720 20x/0.40 PLPHi objective. WD 12 mm
DX.7740 S40x/0.65 PLPHi objective. WD 0.7 mm
DX.7700 S100x/1.25 PLPHi oil immersion objective. WD 0.2 mm

WD = working distance

**All objectives have an M25 mm thread*

STAGES

DX.9501-R Stage with Gorilla glass. Right handed
DX.9501-L Stage with Gorilla glass. Left handed
DX.9504-R Stage with Sapphire glass. Right handed
DX.9504-L Stage with Sapphire glass. Left handed
DX.9501-LG Option for left handed stage with Gorilla glass*
DX.9504-RS Option for right handed stage with Sapphire glass*
DX.9504-LS Option for left handed stage with Sapphire glass*
DX.9522 X-Y stranslation 30 x 30 mm stage for round stage

** Only with new Delphi-X Observer microscopes*
(resp. DX.xxSx-xxx/LG, DX.xxSx-xxx/RS and DX.xxSx-xxx/LS)

PHASE CONTRAST EQUIPMENT

DX.9126 Phase contrast set with 10/20/S40 and S100x oil objectives, supplied with rotating disc phase contrast condenser with phase annuli and alignment telescope
DX.9140 Rotating disc phase contrast condenser with phase annuli without objectives
DX.9148 Alignment telescope for phase contrast, Ø 30 mm tube

CONDENSERS

DX.9105 Abbe condenser with 0.9/1.25 swing-out front lens
DX.9110 Dry darkfield condenser
DX.9112 Oil immersion darkfield condenser

POLARIZER

DX.9660 Simple polarization kit
DX.9662 Special polarization kit for gout

DIFFERENTIAL INTERFERENCE CONTRAST

DX.9697 Differential interference contrast set (DIC) for life science models. Includes three DIC prisms for the rotating disc condenser to be used with the 10x, 20x, 40x and 100x objectives, two sliders to be used with the 10/20x and 40x/100x objectives and DIC polairzer for transmitted light. Only supplied with newly purchased microscopes

CAMERA ACCESSORIES

DX.9810 C-mount with 1x magnification for C-mount camera
DX.9835 C-mount with high resolution relay 0.35x objective for 1/3 inch C-mount camera
DX.9850 C-mount with high resolution relay 0.50x objective for 1/2 inch C-mount camera
DX.9863 C-mount with high resolution relay 0.63x objective for 2/3 inch C-mount camera
AE.5130 Universal SLR adapter with built-in 2x lens for standard 23.2 mm tube. Needs T2 adapter
AE.5025 T2 adapter for Nikon D SLR digital camera
AE.5040 T2 adapter for Canon EOS SLR digital camera

MISCELLANEOUS

DX.5701 Siedentopf ergonomic binocular tilting head
DX.0070 Motorized nosepiece and automatic light intensity control function for Delphi-X Observer (not for Materials Science models). Only with the purchase of a new microscope
DX.9704 Yellow filter for lamphouse, diameter 45 mm
DX.9885 25.4 mm eye-level riser (1 inch)
DX.9887 40 mm nosepiece and stage lowering attachment
DX.9960 100 Watt 24 V halogen bulb (revision 1 models)
DX.9961 100 Watt 12 V halogen bulb (revision-2 models)
DX.9993 3 Watt LED replacement
AE.5168-DX Heating stage and temperature controller up to 50°C*
AE.5214 500 mA 250 V fuses for LED models, 10 pieces
AE.5216 5 A 250 V fuses for Halogen models, 10 pieces

DISPOSABLES

PB.5155 Microscope slides 76 x 26 mm, ground edges, 50 pieces per pack
PB.5157-W Microscope slides 76 x 26 mm, ground edges and frosted side white color, 50 pieces per pack
PB.5157-B Microscope slides 76 x 26 mm, ground edges and frosted side blue color, 50 pieces per pack
PB.5160 Microscope slides 76 x 26 mm with cavity, ground edges. 10 pieces per pack
PB.5165 Coverglasses 18 x 18 mm, 0.13-0.17 mm, 100 pieces
PB.5168 Coverglasses 22 x 22 mm, 0.13-0.17 mm, 100 pieces
PB.5245 Lens cleaning paper, 100 sheets per pack
PB.5255 Immersion oil, 25 ml. Refraction index n = 1.515
PB.5274 Isopropyl alcohol 99%, 200 ml
PB.5275 Cleaning kit: lens fluid, lint free lens tissues/ paper, brush, air blower, cotton swabs



DX.9697 DIC set

euromex.academy



Achios-X inverso

NeoLED™

Achios-X Inverso

for advanced life science applications

Experience optimal comfort and cutting-edge performance with the Achios-X Inverso, an ergonomic masterpiece featuring a state-of-the-art optical system

Tailored to meet the demands of advanced life science applications such as life cell imaging and tissue cultures. This microscope stands as an unparalleled choice



AI.4058-PLPHi

product information

AI.1053-PLPHi	520 (h) x 244 (w) x 543 mm (d) | 14.6 kg
AI.4058-PLPHi	504 (h) x 244 (w) x 520 mm (d) | 16.6 kg

HIGHLIGHTS

- **Extra Wide field WF 10x/22 mm, Ø 30 mm**
- **Head with 45° inclined tubes**
- **Head with ergo tilting 5° - 35° tubes and backwards tilting illumination column**
- **Revolving quintuple nosepiece**
- **IOS 60 mm Plan and Plan Phase**
- **Hoffman contrast and 3D relief contrast**
- **Low positioned stage adjustment knobs**
- **3 W NeoLED™**
- **LCD screen for Smart Light Control**
- **10 Years warranty**



SPECIFICATIONS

EYEPIECES

SWF 10x/22 mm wide field eyepieces with adjustable diopter

HEAD

Binocular head with 45° inclined tubes or binocular ergo head with 5-35° tilting tubes. Interpupillary distance of 48 to 75 mm. Optional side photo port with 100-0/0-100 beamsplitter

NOSEPIECE

Revolving quintuple nosepiece on ball-bearings

OBJECTIVES - 60 MM PARFOCAL

Objectives with 1.2mm coverslip correction

Plan IOS	4x/0.10	10x/0.25	20x/0.40	S40x/0.60
Plan Semi Apo Fluarex IOS	4x/0.13	10x/0.30	20x/0.45	S40x/0.60
Plan Phase IOS		10x/0.30	20x/0.45	S40x/0.60
Plan Semi Apo Phase IOS	4x/0.3	10x/0.30	20x/0.45	S40x/0.60
Plan PLi Hoffman IOS		10x/0.25	20x/0.40	S40x/0.60

Objectives with adjustable coverslip correction

Plan Semi Apo Fluarex IOS	20x/0.45	S40x/0.60	S60x/0.70
Plan Semi Apo Fluarex Phase IOS	20x/0.45	S40x/0.60	S60x/0.70

All M25 thread and with 1.2 mm coverglass correction

STAGE

- 170 x 250 mm stage with 128 x 80 mm mechanical X-Y stage
- Supplied as standard with metal insert for Ø 65 glass plate and universal cell culture dish holder
- Optional metal inserts, Ø 38, 54 and 90 mm cell culture dish and 27x26 mm slides
- Optional metal insert for MultiWell plates (127.76 x 85.48 mm)

CONDENSER

- WD (Working distance): 75 mm, without condenser: 187 mm
- The condenser can be removed to increase WD, allowing multilayered culture flasks
- With slot for phase contrast/embossed contrast/Hoffman contrast sliders

For AI.1xxx and AI.3xxx models

- Condenser N.A. 0.30 with iris diaphragm and slot for sliders

For AI.4xxx models

- Height adjustable Kohler condenser N.A. 0.30 with iris diaphragm and 3 filter holders and shutter function
- Mounted on a backwards tilting illumination column allowing easy access to samples and placement multilayered culture flasks, without removing the condenser

CONDENSER FOR HOFFMAN CONTRAST

- All models can be equipped with a Hoffman condenser and slider with Hoffman slits for 10/20/40objectives. Needs Hoffman objectives

SLIDER FOR 3D RELIEF CONTRAST

- All models can be equipped with a 3D relief contrast slider. Works for standard condenser and Plan or Plan Semi-Apo IOS 10/20/40x objectives

FOCUS ADJUSTMENT

- Coaxial 37.5 mm coarse and fine adjustments with 200 graduations
- Precision 1 µm, 0.2 mm per rotation
- Fine focus knobs are left/right interchangeable

ILLUMINATION

- Transmitted 3 W NeoLED™ illumination with adjustable intensity
- Internal power supply 100-240 V (CE). Fuse 500 mA 250 Vac

SMART LIGHT CONTROL

This intelligent function:

- memorizes the light intensity level for each objective
- heightens comfort
- saves valuable time during routine magnification shifts

NEOLED™

The innovative NeoLED™ design is a combination of a custom LED and a specially designed thin lens with a short focal length. Four main benefits:

- More oblique light from the NeoLED™ light source, which increases the light output significantly
- Less energy is required to achieve this level of light intensity
- The larger aperture of NeoLED™ allows the optical system of the microscope to produce images at higher resolutions, very close to the theoretical diffraction limit of the optics
- Super long life span, up to 50.000 hrs nominal, L70 norm

PACKAGE CONTENT

- Supplied with Ø 65 glass plate and universal cell culture dish holder. Also a power cord, dust cover, green filter, alignment telescope and user manual
- Optional metal inserts for Ø 38, 54 and 90 mm cell culture dish, metal insert for MultiWell plates (127.76 x 85.48 mm) and 0.5x photo adapter

DIMENSIONS

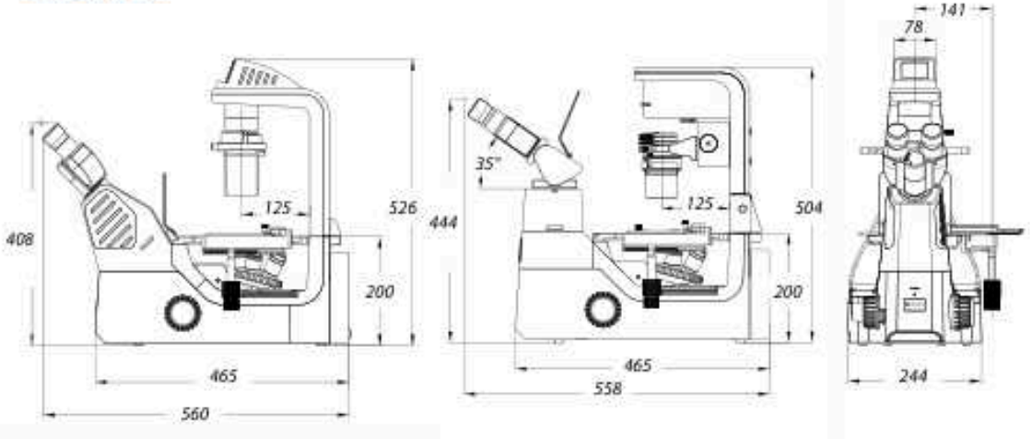



AI.4058-PLPHi



AI.1053-PLPHi

See chapter 8



AI.4058-PLPHi + AI.DIGI-ADD

MODELS	Ergo head	Backwards tilting arm	Plan PLi objective 4x IOS AI.83xx	Plan phase PLPHi objectives 10/20/40 IOS AI.87xx	Plan Semi-Apo Fluarex phase objectives 10/20/40 IOS AI.89xx(i)	Plan Hoffman objectives 10/20/40x AI.88xx	3D Relief contrast	Epi-fluorescence equipment for B, G and UV excitation	Köhler illumination
AI.1053-PLPHi			•	•		o	o		
AI.3053-PLPHFi					•	o	o	•	
AI.4058-PLPHi	•	•	•	•		o	o		•
AI.4058-PLPHFi	•	•			•	o	o	•	•

o = optional

ACCESSORIES AND SPARE PARTS

EYEPIECES

Ø 30 mm tube

AI.6015 WF 15x/16 mm eyepiece
AI.6020 WF 20x/12 mm eyepiece
AI.6099 Pair of eyeshades

OBJECTIVES

Plan infinity corrected PLi, IOS 45 mm parfocal

AI.8304 4x/0.10 PLi objective,*. LWD 30 mm
AI.8310 10x/0.25 PLi objective*. LWD 10.2 mm
AI.8320 20x/0.40 PLi objective*. LWD 12.0 mm
AI.8340 40x/0.60 PLi objective*. LWD 2.2 mm

Plan Phase infinity corrected PLPHi, IOS 45 mm parfocal

AI.8710 10x/0.25 PLPHi objective*. LWD 10.2 mm
AI.8720 20x/0.40 PLPHi objective*. LWD 12.0 mm
AI.8740 40x/0.60 PLPHi objective*. LWD 2.2 mm

Plan Hoffman infinity corrected PL-HOFi, IOS 45 mm parfocal

AI.8810 10x/0.25 PL-HOFi objective* LWD 9.5 mm
AI.8820 20x/0.40 PL-HOFi objective* LWD 4.0 mm
AI.8840 40x/0.60 PL-HOFi objective* LWD 2.3 mm

Plan Phase Semi-Apochromatic Fluarex infinity corrected PLPH-SAFi, IOS 45 mm parfocal

AI.8904 4x/0.13 PLPH-SAFi objective*. LWD 17 mm
AI.8910 10x/0.30 PLPH-SAFi objective*. LWD 7.4 mm
AI.8920 20x/0.45 PLPH-SAFi objective*. LWD 8 mm
AI.8940 40x/0.60 PLPH-SAFi objective*. LWD 3.6 mm

Plan Phase Semi-Apochromatic Fluarex PLPH-SAFi with built-in iris diaphragm, IOS 45 mm parfocal

AI.8920-I 20x/0.45 PLPH-SAFi objective*. LWD 7.5-8.8 mm
AI.8940-I 40x/0.60 PLPH-SAFi objective*. LWD 3-4.4mm
AI.8960-I 60x/0.70 PLPH-SAFi objective**. LWD 1.8-2.6mm

**corrected for 0-2 mm*
***corrected for 0.1-1.3 mm*
All M25 thread
LWD = Long working distance

PHASE CONTRAST ACCESSORIES

AI.9148 Telescope for phase/Hoffman contrast alignment, Ø 30 mm
AI.9196 Phase contrast slider 10/20/40x
AI.9190 Slider 4x/60x phase annuli
AI.9187 Green filter for phase contrast

HOFFMAN CONTRAST

for AI.1xxx and AI.3xxx models

AI.9148 Telescope for phase/Hoffman contrast alignment, Ø 30 mm
AI.9680 Hoffman condenser
AI.9683 Slider with Hoffman slits 10/20/40x

for AI.4xxx models

AI.9148 Telescope for phase/Hoffman contrast alignment, Ø 30 mm
AI.9685 Hoffman condenser
AI.9688 Slider with Hoffman slits 10/20/40x

3D RELIEF CONTRAST

AI.9686 3D relief contrast slider 10/20/40x for condenser
AI.9687 3D relief contrast slider 10/20/40x for head

CAMERA ACCESSORIES

For AI.1053 and AI.3153 models

AI.9810-3 C-mount photo adapter 1x
AI.9850-3 C-mount photo adapter 0.5x

For AI.4058 and AI.4158 models with Ergo head

AI.9810-4 C-mount photo Adapter 1x
AI.9870-4 C-mount photo Adapter 0.7x
AI.9850-4 C-mount photo Adapter 0.5x

MISCELLANEOUS

AI.9569 Universal cell culture dish holder, Ø 35-65 mm. Also holds MultiWell plates
AI.9508 Metal insert with hole for culture flasks
AI.9517 Metal insert for MultiWell plates (127.76 x 85.48 mm)
AI.9535 Petri dish insert 35 mm with 76 x 26 mm slide holder
AI.9554 Petri dish insert 54 mm with 76 x 26 mm slide holder
AI.9590 Petri dish insert 90 mm with 76 x 26 mm slide holder
AI.9506 Transparent glass insert ø 112 mm, inner hole ø 30 mm
AI.9550 Stage extension plate



For 3D emboss: AI.9686, AI.9187 and AI.9687



For Hoffman contrast: AI.9148, AI.9680, AI.9683, AI.8810, AI.8820 and AI.88140



AI.9517 and AI.9535 combined



AI.9554 Petri dish insert 54 mm



AI.9517 MultiWell plate holder



AI.9535 Petri dish insert 35 mm



AI.9590 Petri dish insert 90 mm

euromex.academy



Delphi-X Inverso

Delphi-X Inverso is an inverted microscope for the professional with demanding applications of living cell cultures and stained samples. It is available in two configurations:

- for phase contrast plus DIC (differential interference contrast) equipment
- for fluorescence application

Super contrast semi-apochromatic objectives with collar adjustment ring assure perfect observation of cells or tissues in 1.2 mm thick Petri dishes or flasks

product information





● *DI.1053-PLPHi*

PHASE CONTRAST DI.1053-PLPHFI

HIGHLIGHTS

- **Life science applications**
- **Observation of tissue cultures, living cells**
- **Brightfield, phase contrast**
- **DIC (differential interference contrast)**
- **Long working distance**
  IOS plan semi apochromatic objectives
- **Revolving sextuple nosepiece**
- **5 W LED or 100 W halogen transmitted illumination**
- **Backwards tilting condenser arm**
- **Easy placement of large objects**
- **10 Years warranty**



● *Phase contrast brightfield and differential interference contrast condenser*

SPECIFICATIONS

EYEPIECES

Pair of HWF plan 10x/25 mm or 10x/22 mm eyepieces with diopter adjustment (optional)

HEAD

Trinocular 45° inclined tubes. Interpupillary distance of 47 to 78 mm. Trinocular head with 100-0, 80/20 and 0/100 positions

NOSEPIECE

Revolving sextuple nosepiece on ball-bearings. The nosepiece can be equipped with DIC prisms for the 10x, 20x, 40x and 60x objectives

OBJECTIVES

High numerical infinity semi-apochromatic long working distance plan phase Fluarex PLPHFi 10x/0.30, 20x/0.45, 540x/0.60 IOS objectives enable the sub-cellular structures. An optional 4x/0.13 and 60x/0.70 IOS objectives are also available. The 20x, 40x and optional 60 objectives are equipped with collar adjustment ring for glass thicknesses from 0 to 1.2 mm

Fluarex objectives are made of low-absorption glass.
Fluarex is a trademark of Euromex microscopen bv.
All optics are anti-fungus treated and anti-reflection coated for maximum light throughput

STAGE

Stage 340 x 230 mm, equipped with a coaxial mechanical 130 x 85 mm X-Y stage. Supplied with:

- Metal insert for Ø 38 mm cell culture dish
- Metal insert for Ø 54 mm cell culture dish or 76 x 26 mm slides
- Metal insert for MultiWell plates (127.76 x 85.48 mm)
- Metal insert for Terasaki plates (83.3 x 58.0 mm)
- Optional universal cell culture holder

CONDENSER

Rotating N.A. 0.55 condenser with 6 positions, iris diaphragm and filter holders. Working distance is 26 mm. Supplied with phase contrast annuli for 10x/20x, 40x and 60x objectives, brightfield position and slots for optional DIC prisms. Three filter holders allow the insertion of Ø 38 mm filters in the optical path. The arm with condenser can be tilted backwards for convenient access to the stage. This allows easy placement of large objects like flasks and Petri dishes

MAGNIFICATION CHANGER

A magnification changer with a 1.5x lens allow intermediary magnifications of 1.5 times the standard objective magnifications. Switching from 20x to 30x or 40 to 60 and from 60x to 90x magnification can be done without the need to re-focus on the sample

FLUORESCENCE FILTER SET WHEEL

The Delphi-X Inverso is supplied with a 6-position fluorescence filter set wheel. See photo below. (More information on fluorescence in the Delphi-X Inverso fluorescence)



FOCUSING ADJUSTMENT

Coaxial 10 mm coarse and fine adjustments, 1 µm precision and with friction adjustment

ILLUMINATION

Transmitted 5 W LED or 100 W halogen Intensity adjustable with internal 100-240 V power supply. Fuse holder 5 A / 250 V. Delphi-X Inverso can be extended with fluorescence equipment

PACKAGE CONTENT

Supplied with metal insert for Ø 38 mm cell culture dish and a metal insert for Ø 54 mm cell culture dish with 76 x 26 mm slides, metal insert for MultiWell plates, metal insert for Terasaki plates, blue and green interference Ø 38 mm filters, power cord, dust cover, green filter and alignment telescope and user manual

ICSI SET

(Intracytoplasmic sperm injection)

- Perfect for inexperienced users in need of training practice as well as for professionals
- Complete manual system
- Large movement range
- Easy micropipette repositioning
- Adjustable micropipette holder angle between 20° and 40°
- Micropipette holder fixing knob reduces vibration and provides easy handling of the sperm
- Easy installation and service
- 3D Hydraulic manipulation joysticks for smooth movement
- Pneumatic Air Injector for ICSI and holding
- No service required for injector
- Identical sensitive injectors on both sides and interchangeable
- Top quality for affordable price
- Medical device CE mark
- Movement range: X/Y/Z: 20 mm each, 1 mm for one complete turn of the handle
- Optional heating stage with controller

Set includes two 3D hydraulic joysticks, two pipette setup mechanisms, one connection bar with moving handle, two air injectors with tubing and pen type micromanipulation, pipette holder, two metal plates for injectors, one set of Allen wrenches, one ruler for mechanic home position adjustment. Unit is packed in a solid carry case



Filters in sliders

HEATING STAGE AE.8010

Heating glass stage for Euromex microscope stage with 110 mm circular hole. The glass plate fits the circular opening of the X-Y stage and enables a flat glass object-plate with constant temperature. The stage has an aluminum frame for superior resistance and flatness. Glass thickness 0.5 mm. Plate diameter 110 mm



AE.8010 Controller

Controller AE.8010

- 2-Channel Temperature Controller with touchscreen interface
- One controller can control up to two devices
- On-board data logging allows for recording temperature as a function of time and logging calibration events and alarms
- The password protected controller is equipped with routines to re-calibrate the sensors against certified thermometers
- Temperature range: from ambient to 60°C
- Temperature accuracy on specimen: ± 0.3°C
- 4.3" touch screen interface
- Alarm buzzer and external alarm connector
- Self calibration routines enable high temperature accuracy



DI.1053-PLPHFi with CMEX camera

MODELS	LWD Plan phase 10x/20x/540x objectives	100 W Halogen illumination	5 W LED illumination
DI.1053-PLPHFi	•		•
DI.2053-PLPHFi	•	•	

ACCESSORIES AND SPARE PARTS

EYEPIECES

Ø 30 mm tube

DI.6010 Super wide field SWF 10x/25 mm eyepiece
DI.6010-C SWF* 10x/25 mm eyepiece with crosshairs
DI.6010-M SWF* 10x/25 mm eyepiece with micrometer
DI.6010-CM SWF* 10x/25 mm eyepiece with micrometer and crosshairs
DI.6010-SG SWF* 10x/25 mm eyepiece with 20 x 20 square grid reticle
DI.6012 Wide field WF 12.5x/17.5 mm eyepiece
DI.6015 Wide field WF 15x/16 mm eyepiece
DI.6020 Wide field WF 20x/12 mm eyepiece
DI.6210 SWF* 10x/22 mm eyepiece
DI.6099-L Eyecup for eyepiece

SWF = super wide field

OBJECTIVES

Plan Semi-Apochromatic Fluarex infinity corrected PL-SAFi, IOS 45 mm parfocal. Recommended for fluorescence

DI.8604 4x/0.13 PL-SAFi objective, LWD 17 mm
DI.8610 10x/0.30 PL-SAFi objective[1], LWD 7.4 mm[3]
DI.8620 20x/0.45 PL-SAFi objective[1], LWD 8 mm[3]
DI.8640 40x/0.60 PL-SAFi objective[1], LWD 3.3 mm[3]
DI.8660 60x/0.70 PL-SAFi objective, LWD 1.9 mm. With built-in iris diaphragm. Coverglass correction 0.1 - 1.3 mm

Plan Phase Semi-Apochromatic Fluarex infinity corrected PLPHFi, IOS 45 mm parfocal

DI.8704 4x/0.13 PLPHFi objective[1]. LWD 16.8 mm. Needs an installed 4x phase annulus
DI.8710 10x/0.30, PLPHFi objective. LWD 10.2 mm
DI.8720 20x/0.45 PLPHFi objective[2]. LWD 7.5 to 8.8 mm.
DI.8740 S40x/0.60 PLPHFi objective[2]. LWD 3 to 4.4 mm

LWD = Long working distance
[1] Coverglass correction 1.2 mm
[2] Coverglass correction 0 - 2 mm
[3] Recommended for DIC
All objectives M25 mounting thread

DIFFERENTIAL INTERFERENCE CONTRAST

DI.9690-00 DIC prism with polarizer for condenser. To be used with Plan Semi-Apo 20/40x objectives
DI.9690-10 DIC prism with polarizer for condenser. To be used with Plan Semi-Apo 10x objective
DI.9693-10 DIC prism for nosepiece to be used with Plan Semi-Apo 10x objective
DI.9693-20 DIC prism for nosepiece to be used with Plan Semi-Apo 20x objective
DI.9693-40 DIC prism for nosepiece to be used with Semi-Apo 40x objective
DI.9698 DIC analyzer for nosepiece



MICROMANIPULATOR ATTACHMENT

AE.8000 Micromanipulator for intracytoplasmic sperm injection (ICSI) suitable with the Oxion Inverso inverted microscope
AE.8010 Heating stage with transparent glass plate for AE.8000 Micromanipulator, including digital temperature controller

CAMERA ACCESSORIES

DI.9810 C-mount with 1x magnification for C-mount camera
DI.9840 C-mount with high resolution 0.40x objective for 1/3 inch C-mount camera
DI.9850 C-mount with high resolution relay 0.50x objective for 1/2 inch C-mount camera

MISCELLANEOUS

DI.9191 Phase contrast annuli for 4x PLPHFi objective DI.8704
DI.9961 100 Watt 12 V halogen bulb
DI.9997 5 Watt LED replacement
AE.5214 500 mA 250 V fuses for LED models, 10 pieces
AE.5216 5 A 250 V fuses for Halogen models, 10 pieces

DISPOSABLES

PB.5155 Microscope slides 76 x 26 mm, ground edges, 50 pieces per pack
PB.5157-W Microscope slides 76 x 26 mm, ground edges and frosted side white color, 50 pieces per pack
PB.5157-B Microscope slides 76 x 26 mm, ground edges and frosted side blue color, 50 pieces per pack
PB.5165 Coverglasses 18 x 18 mm, 0.13-0.17 mm, 100 pieces
PB.5168 Coverglasses 22 x 22 mm, 0.13-0.17 mm, 100 pieces
PB.5245 Lens cleaning paper, 100 sheets per pack
PB.5274 Isopropyl alcohol 99%, 200 ml
PB.5275 Cleaning kit: lens fluid, lint free lens tissues/paper, brush, air blower, cotton swabs

DIMENSIONS

euromex.academy

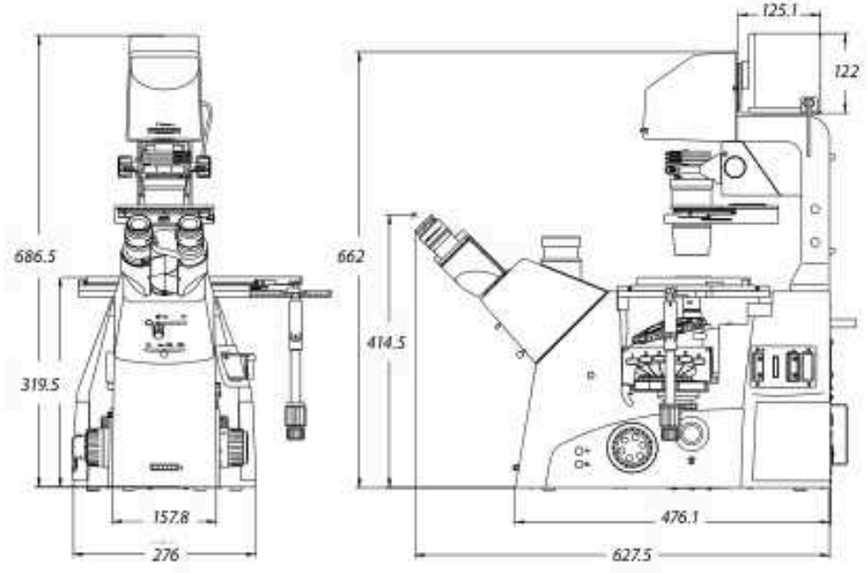

Oxion inverso





HIGHLIGHTS

- **Life science applications**
- **Observation of tissue cultures, living cells**
- **Brightfield and phase contrast**
- **Long working distance IOS plan achromatic objectives**
- **Revolving quintuple nosepiece**
- **5 W LED transmitted illumination**
- **10 Years warranty**

● *Micromanipulator for intracytoplasmic sperm injection (ICSI)*

Oxion Inverso

The Oxion Inverso inverted microscopes are useful for observation of living organisms and tissues cultures in cell culture dishes and flasks

The Oxion Inverso series is available in two configurations:

- for brightfield and phase contrast
- for fluorescence (see chapter on fluorescence)

Dedicated objectives are suitable for 1.2 mm thick glass bottoms of cell culture dishes and flasks



● *OX.2053-PLPH*

product information

OX.2003-PL / OX.2053-PL

SPECIFICATIONS

EYEPIECES

Pair of HWF plan 10x/22 mm eyepieces

HEAD

Trinocular 45° inclined tubes with extended low and high positions for eyepieces. One diopter adjustment on left eyepiece. Interpupillary distance of 54 to 75 mm. Trinocular head with 100-0 % and 0-100 % positions

NOSEPIECE

Revolving quintuple nosepiece on ball-bearings

OBJECTIVES FOR BRIGHTFIELD

(models OX.2003-PL and OX.2053-PL)
infinity color corrected long working distance plan 10x/0.25, 20x/0.40, 40x/0.60 IOS objectives. An optional 60x/0.70 IOS objective is also available

OBJECTIVES FOR PHASE CONTRAST

(models OX.2003-PLPH and OX.2053-PLPH)
infinity color corrected long working distance plan phase 10x/0.25, 20x/0.40, 40x/0.60 IOS objectives

FLUAREX OBJECTIVES FOR BRIGHTFIELD

infinity color corrected long working distance plan Fluarex 10x/0.30, 20x/0.45, 40x/0.65 IOS objectives. An optional plan Fluarex 60x/0.75 IOS objective is also available

FLUAREX OBJECTIVES FOR PHASE CONTRAST

infinity color corrected long working distance plan Fluarex 10x/0.30 and plan phase Fluarex 20x/0.45 and S40x/0.65 IOS objectives

All objectives corrected for 1.2 mm thickness.
Fluarex objectives are made of low-absorption glass
Fluarex is a trademark of Euromex microscopen bv

All optics are anti-fungus treated and anti-reflection coated for maximum light throughput

STAGE

Stage 250 x 230 mm equipped with a coaxial mechanical 120 x 78 mm X-Y stage. Delivered with:

- Stage extension plate
- Metal insert for Ø 65 mm cell culture dish or MultiWell
- Metal insert for 76 x 26 mm slides and 54 mm cell dish (only for models with X-Y stage)
- Optional universal cell culture holder

CONDENSER

N.A. 0.30 condenser with iris diaphragm.
Working distance 72 mm
The models for the phase contrast OX.2003-PLPH, OX.2053-PLPH, OX.2253-PLPHF and OX.2453-PLPHF are supplied with a slider with 4x/10x and 20x/40x pre-centered phase rings

FOCUSING ADJUSTMENT

Coaxial 25 mm coarse and fine adjustments, 2 µm precision and with friction adjustment

ILLUMINATION

Transmitted 5 W LED Intensity adjustable with internal 100-240 V power supply. Fuse holder 3.15 A / 250 V
Oxion Inverso can be extended with fluorescence equipment

FILTERS FOR PHASE CONTRAST MODELS

Interference filter 550 nm green and blue filter, Ø 45 mm

PACKAGE CONTENT

Supplied with metal insert with Ø 25 mm hole, metal insert for Ø 35 mm cell culture dish, blue LBD and green 550 nm interference Ø 45 mm filter, power cord, dust cover and user manual. Phase contrast models are supplied with 4x/10x and 20x/40x phase contrast annuli in slider, green filter and alignment telescope

ICSI SET (AE.8000)

(Intracytoplasmic sperm injection)

- Perfect for inexperienced users in need of training practice as well as for professionals
- Complete manual system
- Large movement range
- Easy micropipette repositioning
- Adjustable micropipette holder angle between 20° and 40°
- Micropipette holder fixing knob reduces vibration and provides easy handling of the sperm
- Easy installation and service
- 3D Hydraulic manipulation joysticks for smooth movement
- Pneumatic air injector for ICSI and holding
- No service required for injector
- Identical sensitive injectors on both sides and interchangeable
- Top quality for affordable price
- Movement range: X/Y/Z: 20 mm each, 1 mm for one complete turn of the handle
- Optional heating stage with controller

Set includes two 3D hydraulic joysticks, two pipette setup mechanisms, one connection bar with moving handle, two air injectors with tubing and pen type micromanipulation, pipette holder, two metal plates for injectors, one set of Allen wrenches, one ruler for mechanic home position adjustment

MODELS	LWD Plan 10x/20x/40x objectives	LWD Plan phase 10x/20x/40x objectives	Mechanical stage	ICSI equipment
OX.2003-PL	•			
OX.2053-PL	•		•	
OX.2003-PLPH		•		
OX.2053-PLPH		•	•	
OX.2053-PLPH-ICSI		•	•	•

LWD = long working distance

HEATING STAGE AE.8010

Heating glass stage for Euromex microscope stage with 110 mm circular hole. The glass plate fits the circular opening of the X-Y stage and enables a flat glass object-plate with constant temperature. The stage has an aluminum frame for superior resistance and flatness. Glass thickness 0.5 mm. Plate diameter 110 mm



Controller of the AE.8010

Controller AE.8010

- 2-Channel Temperature Controller with touchscreen interface
- One controller can control up to two devices
- External temperature sensor (included) and self calibration routines allow easy calibration of the heating devices
- On-board data logging allows for recording temperature as a function of time and logging calibration events and alarms
- The password protected controller is equipped with routines to re-calibrate the sensors against certified thermometers
- Temperature range: from ambient to 60°C
- Temperature accuracy on specimen: ± 0.3°C
- 4.3" touch screen interface
- External temperature sensor
- On-board data logging to USB drive
- Alarm buzzer and external alarm connector
- One controller can control up to two devices
- Self calibration routines enable high temperature accuracy



OX.2053-PLPH-ICSI
Oxion Inverso with ICSI equipment (intra-cytoplasmic sperm injection)

ACCESSORIES AND SPARE PARTS

EYEPIECES

Ø 30 mm tube

OX.6010 HWF 10x/22 mm eyepiece
OX.6015 HWF 15x/16 mm eyepiece
OX.6110 HWF 10x/22 mm eyepiece with micrometer reticule
OX.6099 Pair of eyecups

Plan infinity corrected PLi, IOS 45 mm parfocal [1]

OX.8304 4x/0.13 PLi objective, LWD 11 mm
OX.8310 10x/0.25 PLi objective, LWD 7.45 mm
OX.8320 20x/0.40 PLi objective, LWD 6.92 mm
OX.8340 40x/0.65 PLi objective, LWD 2.74 mm
OX.8360 60x/0.70 PLi objective, LWD 1.28 mm

Plan Fluarex infinity corrected PLFi for brightfield and fluorescence, IOS 45 mm parfocal [1]

OX.8604 4x/0.13 PLFi objective, LWD 18.95 mm
OX.8610 10x/0.30 PLFi objective, LWD 7.27 mm
OX.8620 20x/0.45 PLFi objective, LWD 6.03 mm
OX.8640 40x/0.65 PLFi objective, LWD 1.79 mm
OX.8660 60x/0.75 PLFi objective, LWD 1.28 mm

Plan Phase infinity corrected PLPHi, IOS 45 mm parfocal [1] [2]

OX.8404 4x/0.13 PLPHi objective, LWD 10.75 mm
OX.8410 10x/0.25 PLPHi objective, LWD 7.45 mm
OX.8420 20x/0.40 PLPHi objective, LWD 6.92 mm
OX.8440 40x/0.65 PLPHi objective, LWD 2.74 mm

Plan Phase Fluarex infinity corrected PLPHFi for fluorescence and phase contrast, IOS 45 mm parfocal [1] [2] [3]

OX.8720 20x/0.45 PLPHFi objective. LWD 6.12 mm
OX.8740 40x/0.65 PLPHFi objective. LWD 1.79 mm

PHASE CONTRAST ATTACHMENTS

OX.9148 Telescope for phase contrast fluorescence alignment
OX.9149 Telescope for phase contrast alignment
OX.9190 Slider with 4x/10x and 20x/40x phase contrast annuli

CAMERA ACCESSORIES

OX.9810 CS/C mount with 1.0x objective
OX.9833 C-mount adapter with 0.33x objective for Oxion microscopes and 1/3" cameras
OX.9850 C-mount adapter with 0.5x objective for Oxion and Oxion Inverso microscopes and 1/2" cameras
AE.5120-2 Trinocular 23.2 mm tube for Oxion photo port revision-2
AE.5130 Universal SLR camera adapter with 2x projection lens for 23.2 mm tubes
Needs T2 adapter and AE.5120-2
AE.5025 T2 adapter for Nikon D digital SLR cameras
AE.5040 T2 adapter for Canon EOS digital SLR cameras

STAGES AND HOLDERS

OX.9500 Mechanical coaxial X-Y 120 x 78 mm stage
OX.9506 Transparent glass insert with Ø 30 mm hole
OX.9508 Metal insert with Ø 25 mm hole
OX.9510 Metallic insert for Ø 65 mm cell culture dish and MultiWell
OX.9512 Metal insert with 76 x 26 mm slide holder and Ø 55 mm cell culture dish holder
OX.9535 Metal insert for Ø 35 mm cell culture dish holder
OX.9550 Stage extension plate
OX.9599 Universal cell culture dish holder

[1] *All objectives are corrected for 1 mm coverglass thickness except OX.8304*
[2] *Phase contrast objectives require slider with phase contrast annuli OX.9163*
[3] *Phase contrast objectives require slider with phase contrast annuli OX.9163*
All optical parts are anti-fungus treated
LWD = Long working distance



OX.9599

MICROMANIPULATOR ATTACHMENT

AE.8000 Micromanipulator for intracytoplasmic sperm injection (ICSI) suitable with the Oxion Inverso inverted microscope
AE.8010 Heating stage with transparent glass plate for AE.8000 Micromanipulator, including advanced digital temperature controller

MISCELLANEOUS

OX.9700 Blue filter Ø 45 mm
OX.9985 5 W NeoLED™ replacement unit
AE.3199 Glass fuses 3.15 A 250 V packed, per 10 pieces

DISPOSABLES

PB.5155 Microscope slides 76 x 26 mm, ground edges, 50 pieces
PB.5165 Coverglasses 18 x 18 mm, thickness 0.13 - 0.17 mm, 100 pieces
PB.5168 Coverglasses 22 x 22 mm, thickness 0.13 - 0.17 mm, 100 pieces
PB.5245 Lens cleaning paper, 100 sheets per pack
PB.5255 Immersion oil, n = 1.515 (25 ml)
PB.5274 Isopropyl alcohol 99% (200 ml)
PB.5275 Cleaning kit: lens cleaning fluid, lint free lens tissues, brush, air blower, cotton swabs

euromex.academy

DIMENSIONS

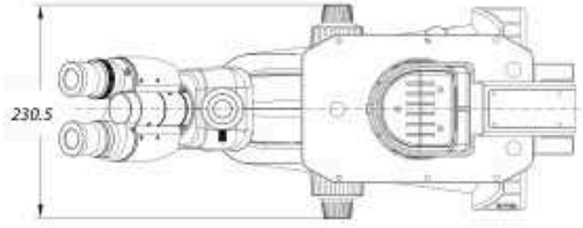



Accessories supplied with phase contrast models

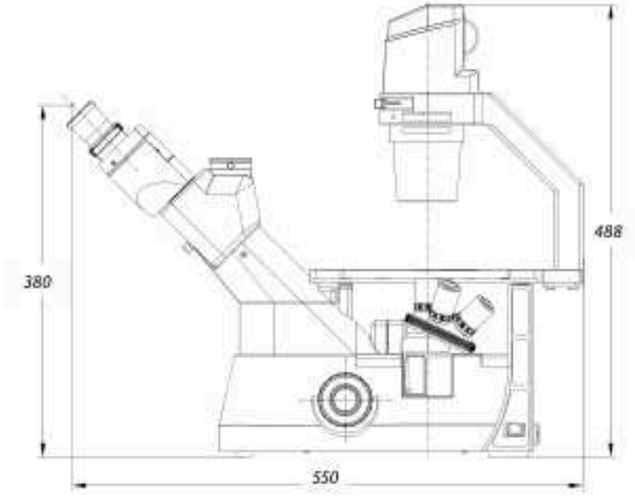

Delphi-X observer

FEATURED



Delphi-X Observer

Discover the Delphi-X Observer with LED fluorescence illumination, page 162

fluorescence microscopes

Euromex offers a wide range of life science upright and inverted microscopes for researchers and biologists worldwide

On the next pages you will find all models that can be used in life science fluorescence applications, using mercury vapor lamps or LED technology together with optimized fluorescence filter sets

life science

fluorescence microscopes



product information

BSCOPE • 142
ISCOPE • 148
ACHIOS-X OBSERVER • 158
DELPHI-X OBSERVER • 162
ACHIOS-X INVERSO • 168
DELPHI-X INVERSO • 174
OXION INVERSO • 180
FLUORESCENCE LED SOURCES • 186
FLUORESCENCE FILTER SETS • 188



bScope
fluorescence

The bScope microscope for fluorescence microscopy is equipped with four monochromatic LEDs

The microscopes are supplied with fluorescence filter sets and dichroic mirrors for excitation in the blue, green, violet and ultraviolet spectral regions



● *BS.3153-PLi*

product information



BS.3153-PL(F)i

HIGHLIGHTS

- **Trinocular models**
- **WF 10x/22 mm eyepieces, 30 mm tubes**
- **Diopter adjustment on both tubes**
- **Reversed ball-bearing quintuple nosepiece with slot for polarization filter**
- **Plan IOS and plan Fluarex IOS objectives**
- **Rackless integrated mechanical X-Y stage**
- **Color coded condenser**
- **Epi-fluorescence illumination with four monochromatic LEDs**
- **3 W NeoLED™ adjustable transmitted illumination**
- **Integrated carrying grip**
- **Cable storage system and anti-theft system**
- **10 Years warranty**



● *BS.3153-PLi*

SPECIFICATIONS

EYEPIECES
Wide field HWF 10x/22 mm secured eyepieces (Ø 30 mm tube)

HEAD
The bScope is equipped with a Siedentopf type head and with 30° inclined Ø 30 mm tubes and with a ± 5 diopter adjustment on left eyepiece. The interpupillary distance is adjustable between 48 to 76 mm

The trinocular head comes with a Ø 23.2 mm tube, ensuring maximum flexibility. The prisms inside the heads are designed to minimize the light absorption for perfect digital imaging. The trinocular head has a 20:80 beamsplitter and generates an erect image

NOSEPIECE
Revolving and reversed ball-bearing quintuple nosepiece

OBJECTIVES
The state-of-the-art production techniques and multi-layer coatings used for the manufacturing of the bScope objectives enable the bScope to be used for the most demanding applications. World class spherical aberration correction and modern CNC and assembly technology ensure the perfect centering of the objectives

- Plan infinity corrected PLi 4x/0.10, 10x/0.25, 20x/0.40, S40x/0.65, S60x/0.85 and S100x/1.25 oil immersion IOS objectives for applications where violet or Ultra-Violet excitation is not needed

- Plan Fluarex infinity corrected PLFi 4x/0.10, 10x/0.25, 20x/0.40, S40x/0.65 and S100x oil/0.90 IOS objectives for applications where either higher resolving power or violet or ultra-violet excitation is needed

All S40x, S60x and S100x oil immersion objectives are spring loaded. All optics are anti-fungus treated and anti-reflection coated for maximum light throughput

FOCUSING

Double coaxial, low-positioned coarse and fine adjustments with 180 graduations. Precision 1.1 µm, 200 µm per rotation, total travel range is approximately 19 mm. Supplied with an adjustable rack stop to prevent damage to sample and objectives. The coarse adjustment is equipped with friction control

STAGE

The bScope is equipped with a scratch-resistant 152/197 x 131 mm stage with integrated 75 x 36 mm rackless mechanical X-Y stage, Vernier scale, soft-close removable specimen holder. The rackless stage has no protruding parts, enables smoother movements and is safer in use. Low-positioned X-Y control knobs prevent fatigue during long working sessions

CONDENSER FOR BRIGHTFIELD

The standard height adjustable Abbe N.A. 1.25 condenser for brightfield comes with an iris diaphragm and swing-out filter holder. The condenser is color coded. Optionally available swing-out Abbe condenser (BS.9105)

CONDENSER FOR ZERNIKE PHASE CONTRAST

The height adjustable Zernike NA. 1.25 phase contrast disc condenser comes with phase annuli for 10/20/S40x and S100x oil phase contrast objectives, an iris diaphragm, a swing-out filter holder and also a BF position for brightfield contrast. Phase contrast objectives are available in either EPL-PHi or PL-PHi versions. Supplied with alignment telescope and green filter

CONDENSER FOR SIMPLE PHASE CONTRAST

The height adjustable NA. 1.25 simple phase contrast condenser has a free slot for either a slider for 10/S40x phase contrast objectives, or a slider for 20x/S100x oil phase contrast objectives. The condenser has an iris diaphragm and filter holder. The condenser includes a BF position for brightfield contrast with an iris diaphragm and filter holder. Phase contrast objectives available in either EPL-PHi or PL-PHi version. Supplied with alignment telescope and green filter

POLARIZATION

The bScope has an integrated slot above the nosepiece for an optional polarization filter

FLUORESCENCE ATTACHMENT

- Epi-illumination with four 5 W LEDs for fluorescence excitation from 450 to 470 nm (blue), 515 to 535 nm (green), 390 to 400 (violet) and 360 to 370 nm (ultraviolet). External 100-240 V power supply
- Fluorescence filter set for blue excitation (EX450-490 (BP) DM505 EM515 (LP), green excitation (EX495-555 (BP) DM580 EM595 (LP), UV excitation (EX320-380 (BP) DM420 EM435 (LP) and violet excitation (EX380-415 (BP) DM460 EM475 (LP)
- Supplied with UV protection shield

NEOLED™ TRANSMITTED ILLUMINATION

NeoLED

The 3 W adjustable Köhler NeoLED™ transmitted illumination is powered by an internal 100-240 V power supply making it suitable for worldwide use. The innovative NeoLED™ design offers larger apertures, allowing the optical system of the bScope microscope to produce images at higher resolutions, very close to the theoretical diffraction limit of the optics. Other benefits of the NeoLED™ is the low energy consumption, no heating and a long operating life span

Ergonomic carrying grip for easy transportation



KÖHLER ILLUMINATION

A Köhler illumination ensures for all infinity corrected IOS models the highest possible contrast and the maximum achievable resolving power. Generates a uniform illumination of the sample and eliminates all interference from dust on lenses and side glare of the light source

CORDLESS USE

The optional rechargeable AA batteries turn the bScope into a cordless system for transmitted illumination

CSS – CABLE STORAGE SYSTEM

Allows users to easily stow away excess cable length into the back of the instrument during operation and to roll up the power cable for easy storage

CARRYING GRIP

The integrated carrying grip at the back of the microscope ensures safe transportation of the microscope

ANTI-THEFT SLOT

At the back of the microscope a Kensington Security Slot is placed, which can be used to secure the instrument from theft

PACKAGE CONTENT

Smart polystyrene packaging ensures a low environmental footprint while maintaining maximum safety during transport. Supplied with power cord, dust cover, tools, a spare fuse, white filter, user manual and 5 ml immersion oil



euromex.academy

YouTube

● BS.3153-PLi

BSCOPE WITH EPI-FLUORESCENCE 4 LED ILLUMINATION (BLUE, GREEN, VIOLET AND ULTRA-VIOLET)

MODELS	Trinocular	HWF 10x/22 mm eyepieces	Quintuple nosepiece Plan PLi 4/10/S40/ S100x oil	Quintuple nosepiece Plan Fluarex PLFi 4/10/S40/ S100x oil *
BS.3153-PLi	•	•	•	
BS.3153-PLFi	•	•		•

**The plan Fluarex infinity corrected IOS objectives are recommended for applications where either higher resolving power or violet or ultra-violet excitation is needed*

DIMENSIONS

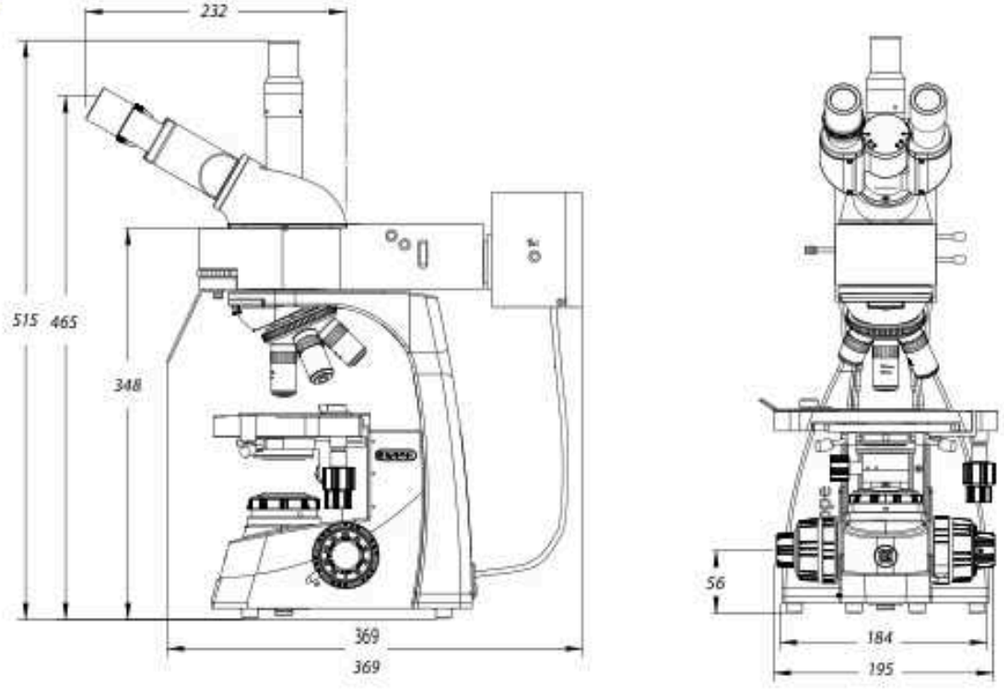

ACCESSORIES AND SPARE PARTS

EYEPIECES

Ø 30 mm tube

BS.6310 WF 10x/22 mm eyepiece
BS.6310-M WF 10x/22 mm eyepiece
BS.6315 WF 15x/12 mm eyepiece
BS.6399 Pair of eyecups

OBJECTIVES

Plan infinity corrected PLi, IOS 45 mm parfocal

BS.8404 4x/0.10 PLi objective. WD 21.0 mm
BS.8410 10x/0.25 PLi objective. WD 5.0 mm
BS.8420 20x/0.40 PLi objective. WD 8.8 mm
BS.8440 S40x/0.65 PLi objective. WD 0.66 mm
BS.8460 S60x/0.80 PLi objective. WD 0.46 mm
BS.8400 S100x/1.25 oil immersion PLi objective. WD 0.36 mm

Plan Fluarex infinity corrected PLFi, IOS 45 mm parfocal

86.550 4x /0.15 PLFi objective. WD 21.6 mm
86.552 10x/0.35 PLFi objective. WD 2.9 mm
86.554 20x/0.65 PLFi objective. WD 1.5 mm
86.556 PLF S40x/0.85 PLFi objective WD 0.6 mm
BS.7400 S100x/0.9 oil immersion PLFi objective. WD 0.13 mm

WD = working distance

For phase contrast equipment and accessories, see chapter 4 Life science, bScope

CONDENSERS

BS.9102 Abbe condenser 1,25 NA with slot for darkfield and phase contrast sliders
BS.9170 Slider with darkfield stop for standard Abbe condenser with slot
BS.9105 Swing-out Abbe condenser 0.9/1.25 NA

POLARIZATION ATTACHMENTS

BS.9647 Polarization polarizer Ø 6 mm for slider under bScope head
BS.9651 Polarization attachment for lamphouse with 360° scale

MISCELLANEOUS

BS.9993 NeoLED™ replacement unit
BS.9200-LED/WOO Epi-fluorescence illuminator Life science microscopes
AE.1370 Set of rechargeable AA batteries, three pieces
AE.5226 Glass fuses 3A 250V, 10 pieces

CAMERA ACCESSORIES

AE.5130 Universal Ø 23.2 mm tube adapter with built-in 2x lens for SLR photo camera with APS-C sensor. Needs T2 adapter
AE.5025 T2 adapter for Nikon D SLR digital camera
AE.5040 T2 adapter for Canon EOS SLR digital camera

DISPOSABLES

PB.5155 Microscope slides 76 x 26 mm, ground edges, 50 pieces
PB.5165 Coverglasses 18 x 18 mm, thickness 0.13-0.17 mm, 100 pieces
PB.5168 Coverglasses 22 x 22 mm, thickness 0.13-0.17 mm, 100 pieces
PB.5245 Lens cleaning paper, 100 sheets per pack
PB.5255 Immersion oil (25 ml). n = 1.515
PB.5274 Isopropyl alcohol 99% (200 ml)
PB.5275 Cleaning kit: lens cleaning fluid, lint free lens tissues/paper, brush, air blower, cotton swabs
PB.5276 Microscope maintenance and servicing kit, 16 pieces: cleaning brush, screwdriver set of 6, air blower, 3 Allen keys, 1.5, 2, 2.5 mm, lens cleaning fluid 20 ml, cleaning cloth 140 x 140 mm, 100 lens tissue sheets, tube of maintenance grease, 10 ml bottle of oil, packed in a nice toolbox

LIFE SCIENCE MICROSCOPES

iscope

NeoLED™



iScope
fluorescence

The excellent optics and mechanical components make the iScope a state-of-the art microscope that is amongst others suitable for fluorescence applications in life science and biotechnological fields

The iScope fluorescence microscope can be supplied with:
- 6-position rotating attachment with 100 W mercury vapor light source
- 3-position slider attachment with 100 W mercury vapor light source



● *IS.3152 PLi-3*

product information

IS.3153-XXX

HIGHLIGHTS

- **HWF 10x/22 mm eyepieces**
- **Optional ergonomic tilting head**
- **E-Plan, plan and plan Fluarex corrected IOS objectives**
- **187/230 x 140 mm rackless stage with integrated X-Y stage**
- **Height adjustable Abbe condenser N.A. 1.25**
- **Diascopic 3 W NeoLED™ Köhler illumination**
- **Epi-fluorescence 100 W HBO mercury vapor**
- **iCare sensor for energy saving**
- **CSS - Cable Storage System**
- **10 Years warranty**



● *IS.3153-PLFi/6*

SPECIFICATIONS

EYEPIECES

EWF 10x/22 mm eyepieces wich can be secured.

HEAD

Trinocular Siedentopf type heads with 30° inclined tubes, interpupillary distance 48 to 76 mm. The plan infinity corrected models have a light path selector (100:0 / 50:50) and ± 5 diopter adjustments on both tubes. The E-plan infinity corrected models have a fixed beam splitter (50:50) and one ± 5 diopter adjustment. All models come with a Ø 23.2 mm photo port. A unique rotating system allows the ergonomic positioning of eyepieces in a high (431 mm) and in a low position (397 mm). An optional ergonomic tilting head and photo attachment are also available

NOSEPIECE

Revolving and reversed nosepiece for a maximum of five objectives

STAGE

187/230 x 140 mm rackless stage equipped with double slide holder and integrated 79 x 52 mm mechanical X-Y stage. The iScope rackless stage has no protruding parts, enabling smoother movements and is safer

CONDENSER FOR BRIGHTFIELD

The standard height adjustable Abbe N.A. 1.25 condenser for brightfield accepts sliders with phase annuli suitable for plan phase 10x/20x or S40x/S100x oil immersion IOS objectives for economical phase contrast. With magnification indication. A slider with a simple dark stop for darkfield up to 400x magnification is also available

CONDENSER FOR ZERNIKE PHASE CONTRAST

An optional height adjustable Zernike NA. 1.25 phase contrast disc condenser with plan phase 10/20/S40x and S100x oil immersion objectives and darkfield stop position for darkfield contrast observation up to 400x magnification

OBJECTIVES

E-Plan EPLi IOS	4x/0.10	10x/0.25		S40x/0.65		S100x/1.25 oil
Plan PLi IOS	4x/0.10	10x/0.25	20x/0.40*	S40x/0.65	S60x/0.85*	S100x/1.25 oil
Plan PLFi IOS	4x/0.13	10x/0.30	20x/0.50*	S40x/0.75		S100x/1.30 oil

** optional: the plan Fluarex PLFi objectives are suitable for violet and ultra violet excitation*
All optics are anti-fungus treated and anti-reflection coated for maximum light throughput

FOCUSING

Coaxial coarse and fine adjustments, 200 graduations, 1 µm per graduation, 200 µm per rotation, total travel range is approximately 24 mm. Supplied with an adjustable rack stop to prevent damage to sample and objectives. The coarse adjustments are equipped with friction control

NEOLED™ ILLUMINATION

3 W adjustable Köhler NeoLED™ diascopic illumination with internal 100-240 V power supply

The innovative NeoLED™ design offers larger apertures, allowing the optical system of the iScope microscope to produce images at higher resolutions, very close to the theoretical diffraction limit of the optics. Other benefits of the NeoLED™ is the low energy consumption, no heating and a long operating life span

The Köhler illumination on models with IOS plan and plan phase infinity corrected systems provides high contrast and a maximum achievable resolving power of the optics. Also available for other models as an option

ILLUMINATION FOR FLUORESCENCE

The 6-position rotating or 3-position slider fluorescence attachments are supplied with standard 100 W HBO mercury vapor light source for a broad powerful light spectrum and 100-240 V external power supply with indication of the life span of 100 W HBO lamp

Supplied with standard fluorescence filter sets for blue excitation (EX460-490 (BP) DM500 EM520 (LP) and green excitation (EX510-550 (BP) DM570 EM590 (LP) and a UV protection shield. Optional standard fluorescence filters for UV excitation (EX330-385 (BP) DM400 EM420 (LP) and violet excitation (EX400-410 (BP) DM455 EM455 (LP)

The iScope fluorescence microscopes can also be supplied with optimized and zero-pixel shift optimized filter sets on request. See end of this chapter

LED ILLUMINATION FOR FLUORESCENCE

Two LED sources for fluorescence are available for 4 or 9 excitation wavelengths. See our product LE.6400

ICARE SENSOR

The unique iCare Sensor is developed to avoid unnecessary loss of energy. The illumination of the microscope automatically switches off shortly after microscopists step away from their position

CSS–CABLE STORAGE SYSTEM

iScope allows users to easily insert the power cable into the back of the instrument, which enables easy storage

The integrated carrying grip at the back of the microscope ensures safe transportation of the microscope

PACKAGE CONTENT

Supplied with power cord, dust cover, a spare fuse, user manual and 5 ml immersion oil for models with S100x oil objective. Models with 100 W mercury vapor light source have a UV protection shield. All packed in polystyrene boxes



- *iScope with LED fluorescence LE.6400*

6-POSITION ROTATING ATTACHMENT

With 100 W mercury vapor light source. The 6-position rotating fluorescence attachments are supplied with a standard 100 W HBO mercury vapor light source for a broad powerful light spectrum. Supplied with standard fluorescence filter sets for excitation in the blue and green light spectrum and a UV protection shield

MODELS	Trino	Diopter adjustable on both sides	E-plan EPLi 4x/10x/S40x and S100x oil objectives	Plan PLi 4x/10x/S40x and S100x oil objectives	Plan PLFi 4x/10x/S40 and S100x oil objectives	Filter sets (blue & green)	100 W HBO light source	LED fluorescence illumination*	NeoLED™ illumination
IS.3153-EPLi/6	•		•			•	•	o*	•
IS.3153-PLi/6	•	•		•		•	•	o*	•
IS.3153-PLFi/6	•	•			•	•	•	o*	•

** Can be supplied optionally. Please order the LE.6400-ADD to replace the HBO illumination for the LE.6400 illuminator. See **LED light sources** in this chapter for more information*

3-POSITION SLIDER ATTACHMENT

With 100 W mercury vapor light source. The 3-position slider fluorescence attachments are supplied with standard 100 W HBO mercury vapor light source for a broad powerful light spectrum. Supplied with standard fluorescence filter sets for blue and green excitation and a UV protection shield

MODELS	Trino	Diopter adjustable on both sides	Plan PLi 4x/10x/S40x and S100x oil objectives	Plan PLFi 4x/10x/S40x and S100x oil objectives	Filter sets (blue & green)	100 W HBO light source	LED fluorescence illumination*	NeoLED™ illumination
IS.3153-PLi/3	•	•	•		•	•	o*	•
IS.3153-PLFi/3	•	•		•	•	•	o*	•

** Can be supplied optionally. Please order the LE.6400-ADD to replace the HBO illumination for the LE.6400 illuminator. See **LED light sources** in this chapter for more information*

ACCESSORIES AND SPARE PARTS

EYEPIECES

Ø 30 mm tube

IS.6210	EWF 10x/22 mm eyepiece
IS.6210-C	EWF 10x/22 mm eyepiece with crosshairs
IS.6210-P	EWF 10x/22 mm eyepiece with pointer
IS.6210-CM	EWF 10x/22 mm eyepiece with 10/100 micrometer and crosshairs
IS.6212	WF 12.5x/17 mm eyepiece
IS.6215	WF 15x/16 mm eyepiece
IS.6220	WF 20x/12 mm eyepiece
IS.6299	Pair of eyecups infinity models

OBJECTIVES

E-plan EPL, 45 mm parfocal*

IS.7104	4x/0.10 EPL objective. WD 15.2 mm
IS.7110	10x/0.25 EPL objective. WD 5.5 mm
IS.7120	20x/0.40 EPL objective. WD 3.5 mm
IS.7140	S40x/0.65 EPL objective. WD 0.45 mm
IS.7160	S60x/0.85 EPL objective. WD 0.19 mm
IS.7100	S100x/1.25 EPL oil objective. WD 0.13 mm

Plan Phase PLPH, 45 mm parfocal*

IS.7710	10x/0.25 PLPH objective. WD 12.2 mm
IS.7720	20x/0.40 PLPH objective. WD 5 mm
IS.7740	S40x/0.65 PLPH objective. WD 0.37 mm
IS.7700	S100x/1.25 PLPH oil objective. WD 0.13 mm

E-plan infinity corrected EPLi, IOS 45 mm parfocal*

IS.8804	4x/0.10 EPLi objective. WD 15.4 mm
IS.8810	10x/0.25 EPLi objective. WD 5.8 mm
IS.8840	S40x/0.65 EPLi objective. WD 0.43 mm
IS.8800	S100x/1.25 EPLi oil objective. WD 0.13 mm

**0.17 mm cover glass correction*

Plan infinity corrected PLi, IOS 45 mm parfocal*

IS.7202 2x/0.05 PLi objective, WD 18.3 mm. Best used together with swing-out condenser (no coverglass correction)
IS.7204 4x/0.10 PLi objective. WD 15.4 mm (no coverglass correction)
IS.7210 10x/0.25 PLi objective. WD 10 mm
IS.7220 20x/0.40 PLi objective. WD 5.1 mm
IS.7240 540x/0.65 PLi objective. WD 0.54 mm
IS.7260 560x/0.85 PLi objective. WD 0.14 mm
IS.7200 5100x/1.25 PLi oil objective. WD 0.13 mm
IS.7200-I 5100x/1.25 PLi super contrast oil objective with built-in iris diaphragm. WD 0.13 mm
IS.7200-W PLi 5100x/1.10 IOS water immersion objective. WD 0.14 mm

Plan Fluarex infinity corrected PLFi, IOS 45 mm parfocal*

IS.7404 4x/0.13 PLFi objective. WD 16.4 mm
IS.7410 10x/0.30 PLFi objective. WD 2.9 mm
IS.7420 20x/0.50 PLFi objective. WD 1.4 mm
IS.7440 540x/0.75 PLFi objective. WD 0.34 mm
IS.7400 5100x/1.30 PLFi oil objective. WD 0.2 mm

Plan Phase infinity corrected PLPHi, IOS 45 mm parfocal*

IS.8910 10x/0.25 PLPHi objective. WD 10.2 mm
IS.8920 20x/0.40 PLPHi objective. WD 5.1 mm
IS.8940 540x/0.65 PLPHi objective. WD 0.5 mm
IS.8900 5100x/1.25 PLPHi oil objective. WD 0.13 mm

WD = working distance

** 0.17 mm cover glass correction (except IS.7202 and IS.7204)*

CONDENSERS

IS.9102 Standard Abbe condenser 1.25 NA condenser with slot for darkfield and phase contrast sliders
IS.9105 Swing-out 0.9/1.25 NA condenser

PHASE CONTRAST ATTACHMENTS

IS.9124 Zernike phase contrast set PLPH 10/20/40/100 brightfield and darkfield position
IS.9127 Zernike phase contrast set PLPHi 10/20/40/100 IOS brightfield and darkfield position
IS.9148 Telescope for phase contrast Ø 30 mm tube
IS.9149 Telescope for phase contrast Ø 23.2 mm tube
IS.9160 Phase contrast slider set with 10x and 540x PLPH objectives and annuli for 10/S40x PLPH objectives. Also suitable for optional 20x PLPH objective
IS.9161 Phase contrast slider set with 20x and S100x oil PLPH objectives and annuli for 20x/S100x oil PLPH objectives
IS.9162 Phase contrast slider set with 10x and 540x PLPHi IOS infinity corrected objectives and annuli for 10x/540x PLPHi IOS infinity corrected objectives. Also suitable for optional 20x PLPHi infinity corrected objective
IS.9163 Phase contrast slider set with 20x and S100x oil PLPHi IOS infinity corrected objectives and annuli for 20x/5100x PLPHi IOS infinity corrected objectives
IS.9194 Slider with phase contrast annuli for 540 phase contrast objective

POLARIZATION ATTACHMENTS

IS.9600 Polarization filter 45 mm for lamphouse
IS.9601 Polarization set: simple rotating polarizer for lamphouse and fixed polarizer mounted under head
IS.9626 Polarization filter for mounting under the head

FILTERS

IS.9700 Blue filter 45 mm for lamphouse
IS.9702 Green filter 45 mm for lamphouse
IS.9704 Yellow filter 45 mm for lamphouse
IS.9706 White opaque filter 45 mm for lamphouse

OPTIMIZED FLUORESCENCE FILTER SETS

IS.9749-6 Empty filter cube for 6-position fluorescence attachment
IS.9749-3 Empty filter cube for 3-position fluorescence attachment
IS.9753 Filter rail, 3-position

CAMERA ACCESSORIES

IS.9800 Single photo tube attachment with one Ø 23.2 mm tube for IS.5700 ergonomic tilting head of iScope infinity systems

AE.5130 Universal SLR adapter with built-in 2x lens for standard 23.2 mm tube. Needs T2 adapter
AE.5025 T2 adapter for Nikon D SLR digital camera
AE.5040 T2 adapter for Canon EOS SLR digital camera

MISCELLANEOUS

AE.3684 Glass fuses 500 mA 250 V, 10 pieces
SL.5500 NeoLED™ replacement unit

DIMENSIONS

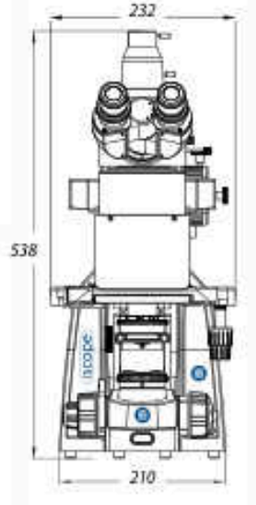

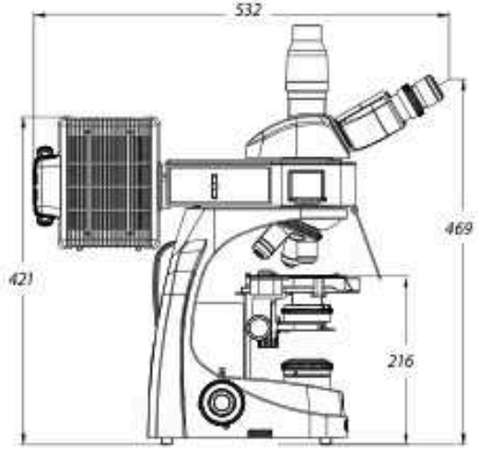

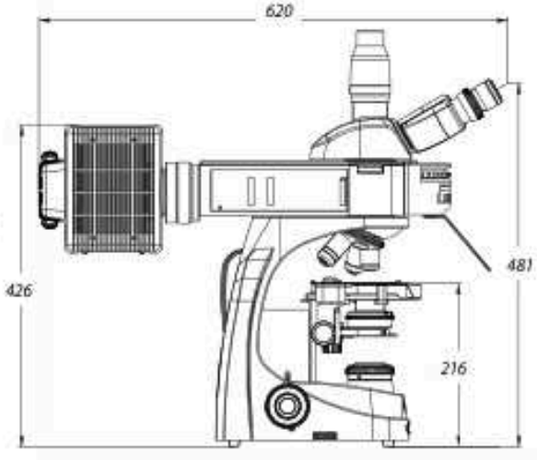

PB.5275 Cleaning kit: lens fluid, lint free lens tissues/paper, brush, air blower, cotton swabs
PB.5276 Microscope maintenance and servicing kit, 16 pieces: cleaning brush, screwdriver set of 6, air blower, 3 Allen keys, 1.5, 2, 2.5 mm, lens cleaning fluid 20 ml, cleaning cloth 140 x 140 mm, 100 lens tissue sheets, tube of maintenance grease, 10 ml bottle of oil, packed in a nice toolbox

DISPOSABLES

PB.5155 Microscope slides 76 x 26 mm, ground edges, 50 pieces per pack
PB.5165 Cover glasses 18 x 18 mm, 0.13-0.17 mm, 100 pieces
PB.5168 Cover glasses 22 x 22 mm, 0.13-0.17 mm, 100 pieces
PB.5245 Lens cleaning paper, 100 sheets per pack
PB.5255 Immersion oil, 25 ml. Refraction index n = 1.515
PB.5274 Iso propyl alcohol 99%, 200 ml

euromex.academy



iScope
for infectious diseases

Access to accurate, reliable diagnostics is essential in the global fight against infectious diseases. Therefor we have developed two specialized versions of our renowned iScope, tailored specifically for tuberculosis (TB) and malaria screening

Fluorescence microscopy offers faster and more efficient TB screening because bacilli fluoresce very brightly in a large field of view (400x). It is also more sensitive, especially in low bacillary loads compared to traditional ZN, TST, IGRAs or molecular tests. The increased speed and detection rate are cost-effective and lead to better outcomes



● *IS.3152-PLi/TB*



IS.1152-PLi/TM	410 (h) x 232 (w) x 346 mm (d) | 8.7 kg
IS.3152-PLi/TB	485 (h) x 232 (w) x 475 mm (d) | 10.2 kg

HIGHLIGHTS

- **LED illumination for long lifespan**
- **High-resolution optical system**
- **Rugged, field-ready design**
- **Ergonomic viewing and intuitive controls**
- **Objectives 40x and 100x without coverglass correction (with coverglass correction optional)**
- **Medical device IVDR**
- **Optional wooden case**
- **Optional (solar) battery pack (only with a new microscope)**
- **Optional cleaning kit**
- **Optional mirror attachment**



● *IS.1152-PLi/TM*

WHY CHOOSE EUROMEX?

With decades of expertise in optical innovation, Euromex is proud to support healthcare professionals with diagnostic solutions that are reliable, accessible and field-proven. Our iScope special editions for TB and malaria screening are trusted worldwide to enhance diagnostic accuracy and save lives

ISCOPE FOR TB SCREENING

Fluorescence

Designed for the detection of Mycobacterium tuberculosis, this model features a powerful LED fluorescence illumination system optimized for Auramine O staining techniques. Its high-contrast optics and ergonomic build support long hours of screening with minimal fatigue, making it ideal for labs and decentralized testing programs

ISCOPE FOR MALARIA SCREENING

Ziehl-Neelsen (ZN) microscopy

Purpose-built brightfield microscope for Giemsa-stained and Ziehl-Neelsen smear examination and general lab use. This edition of the iScope ensures accurate detection of Plasmodium parasites at every developmental stage. It equally does the same outstanding job for Ziehl-Neelsen microscopy. Acid-Fast Bacilli (AFB) stained samples using ZN allow quick diagnoses in a reliable set-up

ACCESSOIRES

EYEPIECES

Ø 30 mm tube

IS.6210	EWF 10x/22 mm eyepiece
IS.6210-C	EWF 10x/22 mm eyepiece with crosshairs
IS.6210-P	EWF 10x/22 mm eyepiece with pointer
IS.6210-CM	EWF 10x/22 mm eyepiece with 10/100 micrometer and crosshairs
IS.6215	WF 15x/16 mm eyepiece
IS.6220	WF 20x/12 mm eyepiece
IS.6310	EWF 10x/20 mm eyepiece
IS.6299	Pair of eyecups infinity models

OBJECTIVES

Plan infinity corrected PLi, IOS 45 mm parfocal

IS.7202	2x/0.05 PLi objective, WD 18.3 mm. **
IS.7204	4x/0.10 PLi objective. WD 15.4 mm
IS.7210	10x/0.25 PLi objective. WD 10 mm *
IS.7220	20x/0.40 PLi objective. WD 5.1 mm *
IS.7240	S40x/0.65 PLi objective. WD 0.54 mm *
IS.7260	S60x/0.85 PLi objective. WD 0.14 mm *
IS.7200	S100x/1.25 PLi objective. WD 0.13 mm *

IS.7240-NC S40x/0.65 PLi objective. WD 0.55 mm

IS.7200-NC S100x/1.25 PLi objective. WD 0.14 mm

WD = working distance

** 0.17 mm cover glass correction*

*** Best to be used together with swing-out condenser IS.9105*

CONDENSERS

IS.9102 Standard Abbe condenser 1.25 NA with slot for darkfield and phase contrast slider

IS.9105 Swing-out 0.9/1.25 N.A. condenser

MISCELLANEOUS

IS.9870 Mirror attachment

IS.9871 Battery pack for autonomous use (only with new microscope)

IS.9872 Solar battery pack for autonomous use (only with new microscope). flight restrictions might apply, UN3481

IS.9873 Surge protector EU type

IS.9873-UK Surge protector UK type

IS.4300 Aluminum case (not suitable for fluorescence models)

IS.4300-W Wooden case (on special request)

PB.5275 Cleaning kit, brush, cloth, cleaning fluid etc.

PB.5276 Microscope maintenance and servicing kit, 16 pieces: cleaning brush, screwdriver set of 6, air blower, 3 Allen keys, 1.5, 2, 2.5 mm, lens cleaning fluid 20 ml, cleaning cloth 140 x 140 mm, 100 lens tissue sheets, tube of maintenance grease, 10 ml bottle of oil, packed in a nice toolbox

DISPOSABLES

PB.5155 Microscope slides 76 x 26 mm, ground edges, 50 pieces per pack

PB.5157-W Microscope slides 76 x 26 mm, ground edges. White frosted side, 50 pieces per pack

PB.5157-B Microscope slides 76 x 26 mm, ground edges and frosted side blue color, 50 pieces per pack

PB.5160 Microscope slides 76 x 26 mm with cavity, ground edges. 10 pieces per pack

PB.5165 Cover glasses 18 x 18 mm, 0.13-0.17 mm, 100 pieces

PB.5168 Cover glasses 22 x 22 mm, 0.13-0.17 mm, 100 pieces

PB.5245 Lens cleaning paper, 100 sheets per pack

PB.5255 Immersion oil, 25 ml. Refraction index n = 1.515

PB.5274 Iso propyl alcohol 99%, 200 ml



IS.4300



PB.5276

MODELS	Bino	Trino	Diopter adjustable on both sides	Plan PLi 4x/10x/540x and S100x objectives	NeoLED™ transmitted light source	Fluorescence LED light source)	TB fluorescence	ZN brightfield	Malaria brightfield	Battery pack (solar)
IS.1152 PLi/TM	•		•	•	•			•	•	o
IS.3152 PLi/TB	•		•	•	•	•	•	•	•	o
IS.1153 PLi/TM		•	•	•	•			•	•	o
IS.3153 PLi/TB		•	•	•	•	•	•	•	•	o

about

Malaria and TB

INTRODUCTION

Malaria and tuberculosis (TB) remain among the leading infectious diseases, causing morbidity and mortality worldwide. About one-quarter of the world's population is infected with TB

- Malaria has a complex life cycle. The protozoan Plasmodium parasites are transmitted to humans through bites of infected female Anopheles mosquitoes. The injected sporozoites move to the liver
- In contrast, human TB is an airborne disease, caused by Mycobacterium TB. It spreads through respiratory droplets

MICROSCOPY IN TB SCREENING

LED Fluorescence

The use of LED fluorescence microscopy for TB diagnosis is well-established and recommended by the World Health Organization (WHO). The method involves staining sputum smears with fluorescent, which binds specifically to Mycobacterium tuberculosis. When viewed under a LED fluorescence microscope, the bacilli emit a bright yellow-green glow against a dark background, making detection faster and more efficient

Advantages include:

- Increased sensitivity compared to ZN* brightfield microscopy
- Faster slide scanning, for high-throughput screening
- Rapid, reliable diagnosis especially for low-resource settings
- Durable, energy-efficient and long-lasting LED light sources

**Ziehl-Neelsen (ZN) brightfield microscopy*

The ZN staining technique has been the cornerstone of TB diagnosis for over a century. ZN-stained Acid-Fast Bacilli (AFB) are typically easier to identify than those visualized with fluorescence microscopy. It is a cost-effective and accessible method for detecting Mycobacterium TB in sputum samples. A single AFB observed in a properly prepared smear is sufficient to confirm a positive diagnosis

MICROSCOPY FOR MALARIA DIAGNOSIS

Brightfield microscopy remains the gold standard for malaria diagnosis, offering precise detection and identification of all



five major malaria parasites: **Plasmodium falciparum**, **P. vivax**, **P. malariae**, **P. ovale** and **P. knowlesi**. This method enables visualization of different parasite stages - including gametocytes - and supports accurate quantification of parasite density, which is essential for monitoring treatment response and assessing therapeutic efficacy

Giemsa stain is the recommended reagent for malaria microscopy and accurate diagnosis relies on the examination of both thick and thin blood films from the same patient. Light microscopy is particularly valuable in investigating suspected treatment failures, providing detailed insights not available through rapid diagnostic tests alone. High-quality optical performance and consistent illumination are critical for reliable parasite detection. Our microscopes are designed to meet these demanding diagnostic requirements, supporting laboratories in both routine screening and advanced case analysis

Auramine fluorescence filter curve

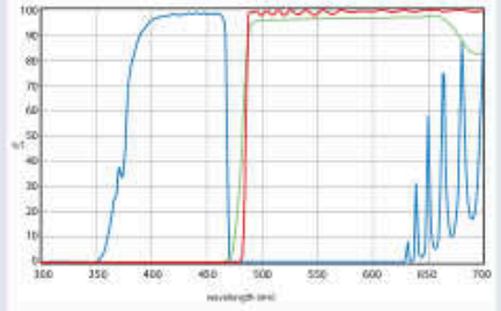



Achios-X Observer

fluorescence

State-of-the-art microscopes for routine Life Science applications

Experience optimal comfort and cutting-edge performance with the Achios-X Observer fluorescence, an ergonomic masterpiece featuring a 60 mm parfocal enhanced infinity optical system (EIS) for routine fluorescence applications



● *AX.3153-PLI*

product information

AX.3153-PLI	516 (h) x 255 (w) x 487 mm (d) | 15.6 kg
AX.3158-PLI	586 (h) x 255 (w) x 487 mm (d) | 17.5 kg

HIGHLIGHTS

- **Extra Wide field WF 10x/22 mm, Ø 30 mm**
- **LED fluorescence**
- **Smart Light Control (SLC)**
- **Revolving quintuple or sextuple reversed nosepiece**
- **Infinity corrected 60 mm achromatic Plan or Plan Semi-Apochromatic EIS objectives**
- **Low positioned stage adjustment knobs**
- **Adjustable color temperature with transmitted 3 W NeoLED™**



● *The 4-positions rotating mechanism*

SPECIFICATIONS

EYEPIECES

EWF 10x/22 mm eyepieces, with diopter adjustment

HEADS

- Standard Siedentopf binocular or trinocular with 30° inclined tubes. A 0.5x c-mount adapter is included (a 1x is optional)
- Siedentopf trinocular (100:0/0:100 switch) with 30° inclined tubes
- Ergonomic tilting head (0° - 35°). A 23.2 mm phototube is included. Several c-mount adapters are available

OBJECTIVES - EIS 60 MM PARFOCAL

- Infinity corrected achromatic Plan EIS objectives*
- Infinity corrected achromatic Plan Semi-Apochromatic EIS objectives*

**M25 mounting thread*

STAGE

The Achios-X Observer comes complete with a generously sized, hard coated, rackless mechanical X-Y stage, meticulously designed for enhanced safety

- Free from any sharp edges protruding from the microscope's sides, this stage ensures a secure and worry-free experience
- Suitable for two slides and allows single handed placement of slides
- Measurements: stage, 230 x 150 mm and mechanical X-Y stage, 78 x 54 mm

CONDENSERS

Depending on the configuration, the Achios-X Observer fluorescence is supplied with a

- Standard Abbe condenser
- Swing-out Abbe condenser

NOSEPIECE

Experience the ease of an intuitive quintuple or an optional sextuple nosepiece on ball- bearings, equipped with gripped ring for effortless and precise rotation

LIGHT AND COLOR TEMPERATURE CONTROL

The Achios-X Observer introduces Smart Light Control. This intelligent function memorizes the last used light intensity level for each objective. The color temperature of the NeoLED™ light source can be adjusted and stored. This innovation not only heightens comfort but also saves valuable time during routine magnification shifts. The eco-friendly NeoLED™ light source is both environmentally conscious and built to endure

ILLUMINATION

The Köhler illumination of the Achios-X Observer provides the most uniformly illuminated and bright field of view

ILLUMINATION FOR FLUORESCENCE

The fluorescence attachment of the Achios-X Observer is equipped with a 4-positions rotating mechanism that can be used to select between any of the 3 filter sets and brightfield (transmitted light). It is supplied with 3 dedicated LED sources to match the included fluorescence filter sets

Supplied with UV shield and standard fluorescence filter sets:

AX.9745 Blue excitation @ 485 nm with long pass filter set (EX 460-495 DM 505 EM 510 LP)

AX.9746 Green excitation @ 525 nm with long pass filter set (EX 510-550 DM 570 EM 575 LP)

AX.9748 UV excitation @ 365 nm with long pass filter set (EX 330-385 DM 410 EM 420 LP)

Power is supplied by the microscope no external power supply is required. Other more specific band pass optimized fluorescence filter sets are also available

OPTIONAL FLUORESCENCE FILTER SETS*

AX.9750.FITC FITC band pass filter set with LED

AX.9750.TRITC TRITC band pass filter set with LED

AX.9750.DAPI DAPI band pass filter set with LED

**See datasheet or website for graphs*

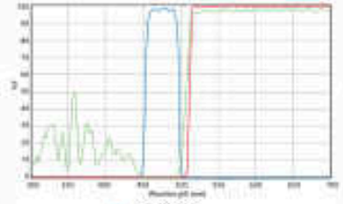

AX.9745

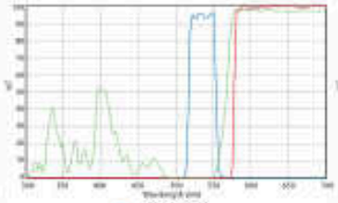

AX.9746

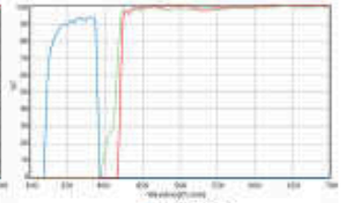

AX.9748

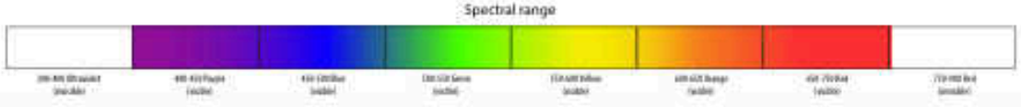

NEOLED™

The innovative NeoLED™ design is a combination of a custom LED and a specially designed thin lens with a short focal length in order to obtain four main benefits:

- More oblique light from the NeoLED™ can be captured, which increases the light output significantly
- Less energy is required to achieve this level of light intensity
- The larger aperture of NeoLED™ allows the optical system of the microscope to produce images at higher resolutions, very close to the theoretical diffraction limit of the optics
- Super long life span, up to 50.000 hrs nominal, L70 norm

CSS – CABLE STORAGE SYSTEM

Allows users to easily stow away excess cable length into the back of the instrument during operation and to roll up the power cable for easy storage

CARRYING GRIP

The integrated carrying grip at the back of the microscope ensures safe transportation of the microscope

PACKAGING

Supplied with power cord, dust cover, screwdriver, user manual and 5 ml immersion oil for models supplied with a 100x objective

MODELS	Bino	Trino	Ergo head	eyepieces EW 10x/22 mm	Plan IOS objectives 4/10/40/100x (oil)	Plan Semi-Apo IOS Fluarex objectives 4/10/40/100x (oil)	LED Fluorescence Blue, Green, UV
AX.3152-PLi	•			•	•		•[1]
AX.3153-PLi		•		•	•		•[1]
AX.3158-PLi			•	•	•		•[1]
AX.3152-APLi	•			•		•	•
AX.3153-APLi		•		•		•	•
AX.3158-APLi			•	•		•	•

Sextuple nosepiece is also available
Some models are also available as in vitro diagnostic medical devices class A - (EU) 2017/746. Contact your Euromex dealer
1 Not suitable for UV LED because of incompatibility with PLi objectives (Objective will be damaged due to long term UV absorbtion)

ACCESSORIES

EYEPIECES

Ø 30 mm tube

AX.6010 EWF 10x/22 mm eyepiece for Achios-X observer. With diopter adjustment

AX.5700-ADD Ergonomical Siedentopf trinocular head with tilting tubes and with 23.2 mm photo tube. ADD-ON option. Only with new microscopes

OBJECTIVES

Plan infinity corrected PLi, EIS 60 mm parfocal*

AX.7202 2x/0.06 PLi objective. WD 7.5 mm

AX.7204 4x/0.10 PLi objective. WD 30 mm

AX.7210 10x/0.25 PLi objective. WD 10.2 mm

AX.7220 20x/0.40 PLi objective. WD 10.2 mm

AX.7240 S40x/0.65 PLi objective. WD 1.5 mm

AX.7260 S60x/0.80 PLi objective**. WD 1.5 mm

AX.7200 S100x/1.25 PLi oil objective. WD 0.3 mm

Plan Semi-Apochromatic infinity corrected PL-SAFi Fluarex, EIS 60 mm parfocal*

AX.7304 4x/0.15 PL-SAFi objective. WD 0.17 mm

AX.7310 10x/0.3 PL-SAFi objective. WD 15.8 mm

AX.7320 20x/0.5 PL-SAFi objective. WD 2.7 mm

AX.7340 S40x/0.75 PL-SAFi objective. WD 1.35

AX.7300 S100x/1.25 PL-SAFi oil objective. WD 0.18 mm

WD = working distance

**25 mm mounting thread*

HEADS

AX.5302 Siedentopf binocular head*

AX.5313 Siedentopf trinocular head 100:0/0:100*

**with 30 degrees inclined tubes*

CONDENSERS

AX.9100 Standard Abbe Condenser

AX.9105 Swing-out Abbe Condenser

CAMERA

AX.9850 C-mount adapter 0,5x for standard head

AX.9810 C-mount adapter 1x for standard head

DX.9810 C-mount with 1x magnification for C-mount camera (only for ergo head)

DX.9835 C-mount with high resolution relay 0.35x objective for 1/3 inch C-mount camera (only for ergo head)

DX.9850 C-mount with high resolution relay 0.50x objective for 1/2 inch C-mount camera (only for ergo head)

DX.9863 C-mount with high resolution relay 0.63x objective for 2/3 inch C-mount camera (only for ergo head)

MISCELLANEOUS

AX.9896 Nosepiece with six objectives ADD-ON option for Achios-X Observer. Only available with the purchase of a new microscope

DX.9501-R Mechanical stage with Gorilla glass, right handed ADD-ON option. Only available with the purchase of a new microscope

AX.9660 Simple polarization kit



Delphi-X Observer
fluorescence

State-of-the-art microscopes for advanced life science fluorescence applications. The outstanding optical performance of the Delphi-X Observer makes it ideal for life science fluorescence applications, where a high performance optical system is required. The larger 22 mm fields of view of the super wide field eyepieces and the high numerical aperture of the plan Fluarex 60 mm parfocal EIS objectives enable perfect observations and color rendering at high resolving power



● *DX.3153-PLi*

product information

DX.3153-PLi	
DX.3153-PLi/HAL	

HIGHLIGHTS

- **Trinocular model**
- **Ergonomic tilting heads**
- **Super wide field SWF 10x/22 mm, Ø 30 mm tubes**
- **Sextuple reversed nosepiece**
- **Enhanced infinity corrected EIS optical system**
- **60 mm parfocal plan EIS objectives**
- **60 mm parfocal plan semi-apochromatic EIS objectives**
- **M25 objective thread mounting**
- **100 W HBO or LED fluorescence illumination**
- **3 W NeoLED™ or 100 W halogen diascopic illumination**

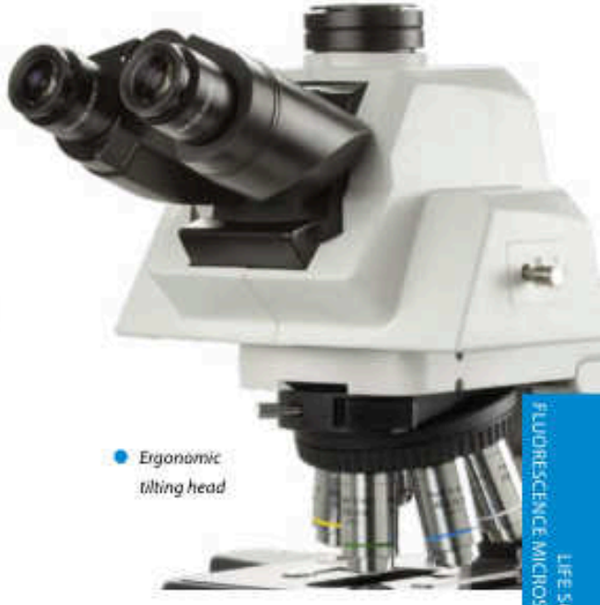

● *Ergonomic tilting head*

SPECIFICATIONS

EYEPIECES

Extended wide field EWF 10x/22 mm, Ø 30 mm tubes

STANDARD HEAD

Siedentopf trinocular head with 30° inclined tubes.
Interpupillary distance adjustable between 47 and 78 mm.
Three position beam splitter (0:100/ 80:20 / 100:0).
Diopter ± 5 adjustments on both eyepieces

ERGONOMIC TILTING HEAD

Optional ergonomic 0 to 35° tilting trinocular head supplied with SWF 10x/25 mm eyepieces, interpupillary distance 47-78 mm and photo tube, standard with Ø 23.2 mm tube.
Also available: a Siedentopf ergonomic binocular tilting head. Only with purchase of a new microscope

NOSEPIECE

Revolving sextuple reversed nosepiece on ball-bearings with 25 mm mounting threads for objectives

MOTORIZED MODEL

The Delphi-X Observer can be supplied with a motorized revolving sextuple reversed nosepiece together with a flip-down condenser. A precise step-motor allows the user to switch from objective by a simple push of a button. Another button allows quick switching between two preselected objectives. The electronics memorize automatically the light intensity levels for each objective after switching. The electronics also automatically flip-out the front lens of the flip-down condenser when the 4x objective is used

ENHANCED INFINITY SYSTEM (EIS)

The enhanced infinity system (EIS) of the Delphi-X Observer consists of super wide field SFWF 10x22 mm eyepieces, high numerical aperture 60 mm parfocal objectives and a 200 mm focal length tube lens. This tube lens reduces the angle of the light rays passing through the optics and as a direct result it significantly improves the chromatic aberration corrections and contrast of the images produced. The objectives with larger diameter enable much higher numerical apertures, improving the overall resolving power of the optical system

PLAN ACHROMATIC EIS OBJECTIVES

(clinical routine applications)
The Delphi-X Observer is supplied with plan achromatic 4x/0.10, 10x/0.25, 20x/0.40, S40x/0.65 and S100x/1.25 (oil immersion) infinity corrected EIS objectives
Available as an option:
2x/0.06, S50x/0.95 (oil immersion) and S60x/0.80

OBJECTIVES

Plan PLi	2x/0.06*	4x/0.10	10x/0.25	20x/0.40	S40x/0.65	S50x/0.95 oil*	S60x/0.80*	S100x/1.25 oil	S100x/1.25 oil iris*
Plan semi-apo Fluarex		4x/0.13	10x/0.30	20x/0.50	S40x/0.75			S100x/1.30 oil	

All objectives are 60 mm parfocal and have a M25 mounting thread , all optics are anti-fungus treated and anti-reflection coated for maximum light throughput and all S40x, S50x, S60x and S100x oil objectives are spring loaded
** Optional*

PLAN SEMI-APOCHROMATIC FLUAREX OBJECTIVES

(Anatomo- and histopathology applications)

The Delphi-X Observer can also be supplied with plan semi-apochromatic 4x/0.13, 10x/0.30, 20x/0.50, S40x/0.75 and S100x/1.30 (oil immersion) infinity corrected EIS objectives

STAGE

190 x 152 mm stage with 80 x 54 mm integrated right-handed mechanical X-Y stage. Supplied with scratch-resistant Gorilla glass. Sapphire scratch-resistant glass is available on request. Left-handed mechanical X-Y stage is available on request

FOCUSING

Coaxial coarse and fine adjustment, 100 graduations, 1 µm precision, 100 µm per rotation, total travel range is approximately 35 mm. Supplied with an adjustable rack stop to prevent damage to sample and objectives. The coarse adjustments are equipped with friction control. The focusing knobs can be switched from left to right according to the user's preference

CONDENSER FOR BRIGHTFIELD

In height adjustable N.A. 0.90/1.25 Abbe swing-out condenser with numerical aperture identification marks

100W HBO ILLUMINATION FOR FLUORESCENCE

The Delphi-X Observer can be configured with a rotating carousel which can contain up to six filter cubes and supplied with a 100 W HBO mercury vapor light source for a broad powerful light spectrum

LED ILLUMINATION FOR FLUORESCENCE

The Delphi-X Observer can also be configured with two different LED systems for fluorescence:

- LE.6400 LED source with 365, 470, 525 and 630 nm LED's with the standard 6-positions attachment and the 2 standard filter sets AE.9746 (Green) and AE.9745 (Blue excitation)
- Integrated 4-positions LED attachment (DX.9200-LED) Supplied with three 365, 485 and 525 nm LED's and three 3 standard filter sets AE.9748 (UV), AE.9746 (Green) and AE.9745 (Blue excitation)

DIASCOPIC ILLUMINATIONS

Two Köhler illuminations are available for the Delphi-X Observer microscope:

- Diascopic intensity adjustable 3 W NeoLED™ Köhler illumination with internal 100-240 V power supply
- Diascopic intensity adjustable 100 W halogen Köhler illumination with internal 100-240 V power supply

The diascopic halogen illumination comes with two push-in/push-out neutral density filters for smooth attenuation of the light intensity for all kind of samples and with one Light Balancing Daylight filter (LBD). The diascopic NeoLED™ illumination comes with a frosted diffuse filter

LIGHT INTENSITY MEMORY FUNCTION

The electronics memorize automatically the light intensity levels for each objective after switching. The electronics also automatically flip out the front lens of the flip-down condenser when the 4x objective is used. Optionally available, only for a new Delphi-X Observer

NEOLED™

The innovative NeoLED™ design is a combination of a custom LED and a specially designed thin lens with a short focal length to obtain three main benefits:
oblique light, less energy and larger aperture

STANDARD GENERAL PURPOSE FLUORESCENCE FILTER SETS

Supplied with standard fluorescence filter sets for blue excitation (EX460-495 DM505 EM510LP) and green excitation (EX510-550 DM570 EM575LP), UV shield and external power supply. Optional: fluorescence filter sets for UV excitation (EX330-385 DM400 EM420LP) and violet excitation (EX400-410 DM455 EM460LP). On special request, the microscope can also be supplied with optimized and zero-pixel shift optimized filter sets on request. See end of this chapter

BLUE EXCITATION (DX.9745)

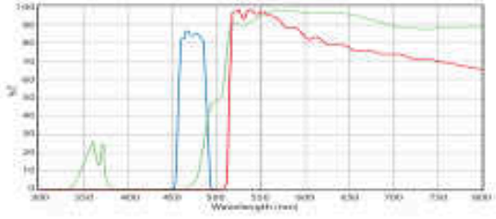

GREEN EXCITATION (DX.9746)

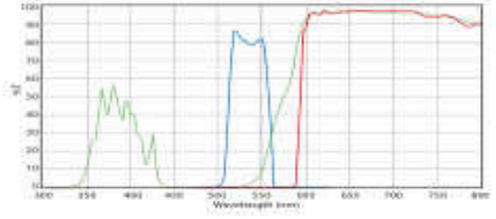

VIOLET EXCITATION (DX.9747)

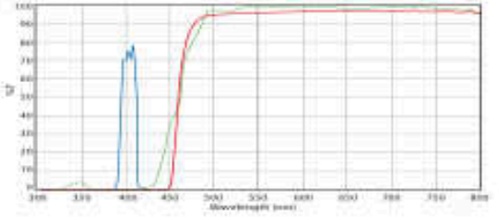

ULTRA-VIOLET EXCITATION (DX.9748)

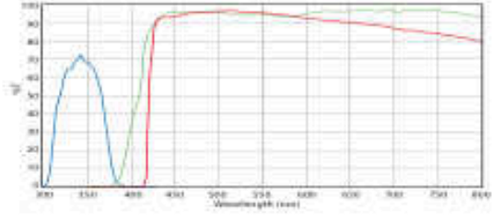

Other with more specific and optimized and application related fluorescence filter sets are also available

ICARE SENSOR

The unique iCare Sensor is developed to avoid unnecessary loss of energy. The illumination of the microscope automatically switches off shortly after microscopists step away from their position

CARRYING GRIP

The carrying grip at the back of the microscope ensures safe transportation of the microscope and the integrated tool & holder makes sure the right tool is always available

PACKAGE CONTENT

Supplied with power cord, dust cover, a spare fuse, user manual and 5 ml immersion oil. All packed in a polystyrene box

DIMENSIONS

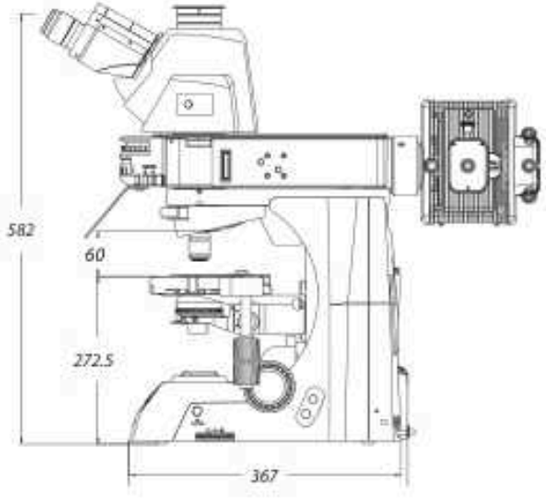

DELPHI-X OBSERVER FOR FLUORESCENCE WITH TRINOCULAR HEAD

MODELS	SWF 10x/22 mm eyepieces	Plan 4/10/20/S40/S100x oil EIS objectives	Plan semi-apo Fluarex 4/10/20/S40/S100x oil EIS objectives	3 W NeoLED™ illumination	100 W Halogen illumination	LED fluorescence illumination*
DX.3153-PLi	•	•		•		o
DX.3153-APLi	•		•	•		o
DX.3153-PLi/HAL	•	•			•	o
DX.3153-APLi/HAL	•		•		•	o

o = optional

DELPHI-X OBSERVER COMBINED WITH

LE.6400, 4-LED fluorescence light source

- As standard 6-Positions attachment
- With 365, 470, 525 and 630 nm LED's
- Supplied with two standard filter sets AE.9746 (Green) and AE.9745 (Blue excitation)
- Optional AE.9748 (UV) and AE.9747 (Violet) standard filter sets

To order, add LE.6400-ADD to the DX.3153 newly purchased microscope

UV and Violet excitation requires Fluarex objectives (DX.3153-APLi or DX.3153-APLi /HAL models



● *LED fluorescence LE.6400*

DX.9200-LED, 3-LED fluorescence light source

- Integrated 4-positions LED attachment
- Supplied with three 365, 485 and 525 nm LED's and three standard filter sets AE.9748 (UV), AE.9746 (Green) and AE.9745 (Blue excitation)

UV and Violet excitation requires Fluarex objectives (DX.3153-APLi or DX.3153-APLi /HAL models



● *DX.9200-LED*

FOR ORDERING MOTORIZED MODELS

Substitute the third digit 5" of the model reference with the digit 7". Example: DX.3173-PLi = DX.3153-PLi model but with motorized nosepiece, flip-down condenser and automatic light control

FOR ORDERING LIGHT INTENSITY MEMORY FUNCTION ONLY

Substitute the third digit 5" of the model reference with the digit 8". Example: DX.3183-PLi = DX.3153-PLi model but with automatic light control

ACCESSORIES AND SPARE PARTS

EYEPIECES

Ø 30 mm tube

DX.6210 Super wide field SWF 10x/22 mm eyepiece
DX.6210-CM Super wide field SWF 10x/22 mm eyepiece with micrometer and crosshairs
DX.6210-SG Super wide field SWF 10x/22 mm eyepiece with 20 x 20 square grid reticle
DX.6012 Wide field WF 12.5x/17.5 mm eyepiece
DX.6015 Wide field WF 15x/16 mm eyepiece
DX.6020 Wide field WF 20x/12 mm eyepiece
DX.6099-L Eyecup for eyepieces

OBJECTIVES

Plan infinity corrected PLi, EIS 60 mm parfocal

DX.7201 1x/0.04 PLi objective. WD 3.2 mm
DX.7202 2x/0.06 PLi objective. WD 7.5 mm
DX.7204 4x/0.10 PLi objective. WD 30 mm
DX.7210 10x/0.25 PLi objective. WD 10.2 mm
DX.7220 20x/0.40 PLi objective. WD 12 mm
DX.7240 S40x/0.65 PLi objective. WD 0.7 mm
DX.7260 S60x/0.80 PLi objectives. WD 0.3 mm
DX.7200 S100x/1.25 PLi oil objective. WD 0.2 mm
DX.7200-I S100x/1.25 PLi oil objective with built-in iris diaphragm. WD 0.2 mm

Plan Semi-Apochromatic Fluarex infinity corrected, PL-SAFi EIS 60 mm parfocal

DX.7304 4x/0.13 PL-SAFi objective. WD 16.5 mm
DX.7310 10x/0.30 PL-SAFi objective. WD 8.1 mm
DX.7320 20x/0.50 PL-SAFi objective. WD 2.1 mm
DX.7340 S40x/0.75 PL-SAFi objective. WD 0.7 mm
DX.7300 S100x/1.30 PL-SAFi oil objective. WD 0.15 mm

WD = working distance

CAMERA ACCESSORIES

DX.9810 C-mount with 1 magnification for C-mount camera
DX.9835 C-mount with high resolution relay 0.35x objective for 1/3 inch C-mount camera
DX.9850 C-mount with high resolution relay 0.50x objective for 1/2 inch C-mount camera
DX.9863 C-mount with high resolution relay 0.63x objective for 2/3 inch C-mount camera
AE.5130 Universal SLR adapter with built-in 2x lens for standard 23.2 mm tube. Needs T2 adapter
AE.5025 T2 adapter for Nikon D SLR digital camera
AE.5040 T2 adapter for Canon EOS SLR digital camera

MISCELLANEOUS

DX.9200-LED LED fluorescence attachment with Blue 460-495 nm excitation LED and EX 460-495 DM 505 EM 510 LP filter set, Green 510-550 nm LED excitation and EX 510-550 DM 570 EM 575 LP filter set
DX.9105 Abbe condenser with 0.9/1.25 swing-out front lens
DX.9501-R Stage with Gorilla glass. Right handed
DX.9501-L Stage with Gorilla glass. Left handed
DX.9504-R Stage with Sapphire glass. Right handed
DX.9504-L Stage with Sapphire glass. Left handed
DX.9501-LG Option* for left handed stage with Gorilla glass
DX.9504-RS Option* for right handed stage with Sapphire glass
DX.9504-LS Option* for left handed stage with Sapphire glass
SL.1385 100 W HBO mercury vapor lamp for fluorescence
DX.9660 Simple polarization kit
DX.9662 Special polarization kit for gout
DX.9704 Yellow filter for lamphouse, diameter 45 mm
DX.9960 100 W 24 V halogen bulb (revision 1 models)
DX.9961 100 W 12 V halogen bulb (revision-2 models)
DX.9993 3 Watt LED replacement
AE.5214 500 mA 250 V fuses for LED models, 10 pieces
AE.5216 5 A 250 V fuses for halogen models, 10 pieces
DX.5701 Siedentopf ergonomic tilting binocular head

** Option mounted only on new Delphi-X Observer microscopes (resp. DX.xx5x-xxx/RS and DX.xx5x-xxx/LS)*

euromex.academy



Achios-X Inverso
fluorescence

Experience optimal comfort and cutting-edge performance with the Achios-X Inverso, an ergonomic masterpiece featuring a state-of-the-art optical system.

Tailored to meet the demands of advanced Life Science applications such as life cell imaging and tissue cultures. This microscope stands as an unparalleled choice

● *AI.4058-PLFi*

product information

AI.3053-PLFi	526 (h) x 244 (w) x 561 mm (d) | 15.5kg
AI.4058-PLFi	504 (h) x 244 (w) x 558 mm (d) | 17.5 kg

HIGHLIGHTS

- **Extra Wide field WF 10x/22 mm, Ø 30 mm**
- **Head with 45° inclined tubes**
- **Head with ergo tilting 5° - 35° tubes and backwards tilting illumination column**
- **Revolving quintuple nosepiece**
- **IOS 60 mm Plan, Plan Phase or Plan Semi-Apochromatic objectives**
- **Hoffman contrast and 3D relief contrast**
- **Low positioned stage adjustment knobs**
- **3 W NeoLED™**
- **LCD screen for Smart Light Control**
- **Blue, green and UV LED fluorescence**
- **10 Years warranty**



SPECIFICATIONS

EYEPIECES

SWF 10x/22 mm wide field eyepieces with adjustable diopter

HEAD

Binocular head with 45° inclined tubes OR binocular ergo head with 5-35° tilting tubes. Interpupillary distance of 48 to 75 mm. Optional side photo port with 100-0/0-100 beamsplitter

NOSEPIECE

Revolving quintuple nosepiece on ball-bearings

OBJECTIVES - 60 MM PARFOCAL

Objectives with 1.2mm coverslip correction

Plan Semi Apo Fluarex IOS	4x/0.13	10x/0.30	20x/0.45	540x/0.60

Objectives with adjustable coverslip correction

Plan Semi Apo Fluarex IOS	20x/0.45	540x/0.60	560x/0.70

Fluarex objectives are made of low-absorption glass Fluarex is a trademark of Euromex microscopen bv. All optics are anti-fungus treated and anti-reflection coated for maximum light throughput

STAGE

- 170 x 250 mm stage with 129 x 83 mm mechanical X-Y stage
- Supplied with metal insert for Ø 65 glass plate and universal cell culture dish holder (AI.9569)
- Optional metal inserts, Ø 35, Ø 54 and Ø 90 mm cell culture dish holder with 27x26 mm slide holder
- Optional metal insert for MultiWell plates (127.76 x 85.48 mm) (AI.9517)

CONDENSER

- WD (Working distance): 75 mm, without condenser: 187 mm
- The condenser can be removed to increase WD, allowing multilayered culture flasks
- With slot for phase contrast/embossed contrast/Hoffman contrast sliders

For AI.3xxx models

- Condenser N.A. 0.30 with iris diaphragm and slot for sliders

For AI.4xxx models

- Height adjustable Kohler condenser N.A. 0.30 with iris diaphragm and 3 filter holders and shutter function
- Mounted on a backwards tilting illumination column allowing easy access to samples and placement multilayered culture flasks, without removing the condenser

FOCUS ADJUSTMENT

- Coaxial 37.5 mm coarse and fine adjustments with 200 graduations
- Precision 1 µm, 0.2 mm per rotation
- Fine focus knobs are left/right interchangeable

ILLUMINATION

LED Epi-fluorescence attachment with 365, 485 and 525 nm LED

Supplied with filters cubes:

UV excitation EX: 360-390 nm - BS: 415 nm - EM: 435-485 nm for DAPI

Blue excitation EX: 460-495 nm - BS: 505 nm - EM: 510-550 nm for FITC

Green excitation EX: 528-553 nm - BS: 565 nm - EM: 578-633 nm for TRITC

SMART LIGHT CONTROL

This intelligent function:

- memorizes the light intensity level for each objective
- heightens comfort
- saves valuable time during routine magnification shifts

NEOLED™

The innovative NeoLED™ design is a combination of a custom LED and a specially designed thin lens with a short focal length. Four main benefits:

- More oblique light from the NeoLED™ light source, which increases the light output significantly
- Less energy is required to achieve this level of light intensity
- The larger aperture of NeoLED™ allows the optical system of the microscope to produce images at higher resolutions, very close to the theoretical diffraction limit of the optics
- Super long life span, up to 50.000 hrs nominal, L70 norm

PACKAGE CONTENT

- Supplied with Ø 65 glass plate and universal cell culture dish holder, power cord, dust cover and user manual
- Fluorescence models are supplied with an anti-reflection shield to be mounted on the condenser and an orange protection shield

DIMENSIONS

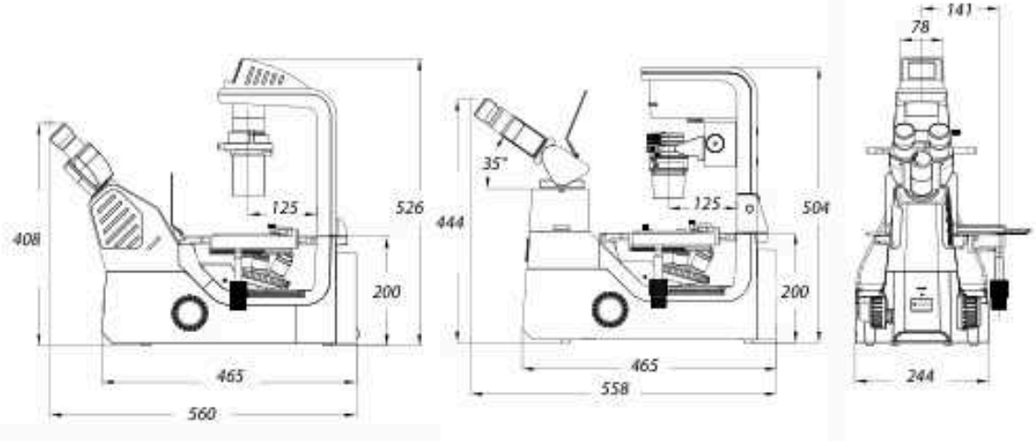



● *AI.3053-PLFi*

● *AI.4058-PLFi*

MODELS	ergo head	Backwards tilting arm	Plan Semi-Apo Fluarex objectives 4/10/20/40 IOS	Height-adjustable condenser	Epi-fluorescence equipment for B, G and UV excitation	Köhler illumination
AI.3053-PLFi	•		•		•	
AI.4058-PLFi		•	•	•	•	•

ACCESSORIES AND SPARE PARTS

EYEPIECES

Ø 30 mm tube

AI.6015 WF 15x/16 mm eyepiece

AI.6020 WF 20x/12 mm eyepiece

AI.6099 Pair of eyeshades

OBJECTIVES

Plan infinity corrected PLi, EIS 60 mm parfocal,

AI.8304 4x/0.10 PLi objective*. LWD 30 mm

AI.8310 10x/0.25 PLi objective*. LWD 10.2 mm

AI.8320 20x/0.40 PLi objective*. LWD 12.0 mm

AI.8340 40x/0.60 PLi objective*. LWD 2.2 mm

Plan Semi Apo Fluarex PL-SAFi, EIS 60 mm parfocal

AI.8604 4x/0.13 PL-SAFi objective*. LWD 17 mm

AI.8610 10x/0.30 PL-SAFi objective*. LWD 7.4 mm

AI.8620 20x/0.45 PL-SAFi objective*. LWD 8 mm

AI.8640 40x/0.60 PL-SAFi objective*. LWD 3.6 mm

Plan Semi Apochromatic Fluarex PL-SAFi with iris diaphragm, EIS 60 mm parfocal

AI.8620-I 20x/0.45 PL-SAFi objective**. LWD 7.5-8.8 mm

AI.8640-I 40x/0.60 PL-SAFi objective.** LWD 3-4.4 mm

AI.8660-I 60x/0.70 PL-SAFi objective***. LWD 1.8-2.6 mm

Plan Semi-Apochromatic Phase Fluarex PLPH-SAFi EIS 60 mm parfocal

AI.8904 4x/0.13 PLPH-SAFi objective**. LWD 17.78mm
AI.8910 10x/0.3 PLPH-SAFi objective**. LWD 7.4mm
AI.8920 20x/0.45 PLPH-SAFi objective**. LWD 8 mm
AI.8940 40x/0.6 PLPH-SAFi objective**. LWD 3.6 mm

Plan Semi-Apochromatic Phase Fluarex PLPH-SAFi with iris diaphragm. EIS 60 mm parfocal

AI.8920-I 20x/0.45 PLPH-SAFi objective**. LWD 7.5-8.8 mm
AI.8940-I 40x/0.6 PLPH-SAFi objective**. LWD 3-4.4mm
AI.8960-I 60x/0.7 PLPH-SAFi objective***. LWD 1.8-2.6mm

WD = working distance
**Coverglass correction 1.2 mm*
*** Coverglass correction 0-2 mm*
**** Coverglass correction 0.1-1.3 mm*
All objectives M25



- *AI.9517 and AI.9535 combined*

- *AI.9554 Petri dish insert 54 mm*





- *AI.9517 MultiWell plate holder*

- *AI.9535 Petri dish insert 35 mm*





- *AI.9590 Petri dish insert 90 mm*

CAMERA ACCESSORIES

For AI.1053 and AI.3153 models

AI.9810-3 C-mount photo adapter 1x
AI.9850-3 C-mount photo adapter 0.5x

For AI.4058 and AI.4158 models with Ergo head

AI.9810-4 C-mount photo Adapter 1x
AI.9870-4 C-mount photo Adapter 0.7x
AI.9850-4 C-mount photo Adapter 0.5x

MISCELLANEOUS

AI.9205 UV protection shield
AI.9206 Anti-reflection shield for standard condensers of models for fluorescence
AI.9569 Universal cell culture dish holder, Ø 35-65 mm. Also holds MultiWell plates
AI.9508 Metal insert with hole for culture flasks
AI.9517 Metal insert for MultiWell plates (127.76 x 85.48 mm)
AI.9535 Petri dish insert 35 mm with 76 x 26 mm slide holder
AI.9554 Petri dish insert 54 mm with 76 x 26 mm slide holder
AI.9590 Petri dish insert 90 mm with 76 x 26 mm slide holder
AI.9506 Transparent glass insert ø 112 mm, inner hole ø 30 mm
AI.9550 Stage extension plate

- *Anti-reflection shield for standard condensers of models for fluorescence*



about

fluorescence

It took many years - since the discovery by Osamu Shimomura of the first proteins aequorin and green fluorescent protein (GFP) in the bio-luminescent jellyfish Aequorea Victoria around the sixties - to develop a specific fluorescence microscope for live-cell imaging which permits essential progress in medical and biological sciences. Today it has become an important tool in Life and Materials Sciences

INTRODUCTION TO FLUORESCENCE MICROSCOPY

Fluorescence is the phenomenon of subsequent specific emission of photons by a fluorophore (chemical compound) after the absorption of specific excitation photons. Fluorophores are used as a dye for staining cells, tissues or materials that can be observed as markers under a fluorescence microscope

DESIGN OF A FLUORESCENCE MICROSCOPE

The basic function of a fluorescence microscope is to bring specific excitation* wavelengths to a stained specimen (with a specific fluorophore) and to catch the subsequent weak emission wavelengths in order to visualize the fluorescent structures on the retina of the eyes or on an imaging camera

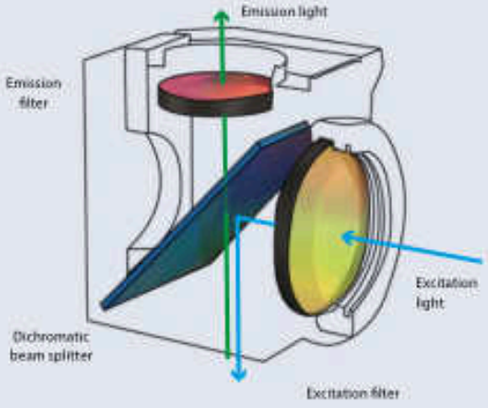

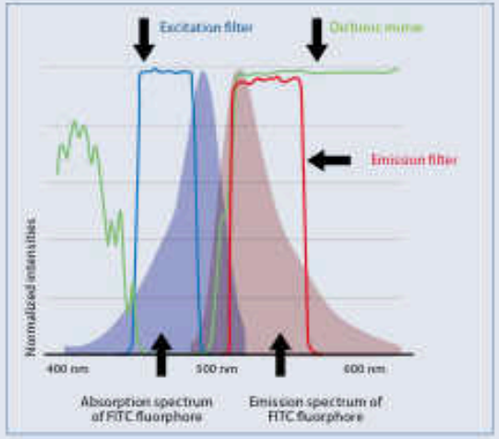

The excitation light of a microscope for fluorescence is provided with either a mercury vapor light source or a monochrome LED. The selection of the specific fluorophore excitation light is done by a so-called emission interference filter that is mounted in a cube together with a dichroic mirror (beam splitter) and the emission filter. The filtered excitation light is further reflected by the dichroic mirror through the objectives towards the sample

The fluorophore(s) inside the specimen will absorb this excitation energy with some efficiency (quantum yield) and will start re-emitting the so-called emission energy, visible light with longer wavelengths than the absorbed light.
The emission light from the specimen that fluoresces will be collected by the objective, pass the dichroic mirror and is separated from excitation and other unwanted light wavelengths by the emission filter. The filtered emission light is further projected to the eyepieces or/and camera imaging sensor





Delphi-X Inverso
fluorescence

The Delphi-X Inverso for fluorescence is an inverted microscope for the professional who needs to observe tissues or cells stained with fluorescence dyes. Super contrast semi-apochromatic Fluarex objectives with collar adjustment ring assure perfect observation of cells or tissues in 1.2 mm thick Petri dishes or flasks

● *DI.3053-PLPHFi*

product information



DI.1053-PLPHFi

HIGHLIGHTS

- **Life science applications**
- **Observation of fluorescence in tissues and cells**
- **Brightfield, phase contrast fluorescence observations**
- **DIC (differential interference contrast)**
- **Long working distance IOS plan semi-apochromatic Fluarex achromatic objectives**
- **Revolving sextuple nosepiece**
- **5 W LED or 100 W halogen transmitted illumination**
- **100 W HBO mercury vapor fluorescence illumination**
- **Backwards tilting condenser arm**
- **Easy placement of large objects**
- **10 Years warranty**



● *Delphi-X Inverso with LED fluorescence illumination (LE.6400)*

SPECIFICATIONS

EYEPIECES

Pair of HWF plan 10x/25 mm or 10x/22 mm eyepieces with diopter adjustment

HEAD

Trinocular 45° inclined tubes. Interpupillary distance of 47 to 78 mm. Trinocular head with 100-0, 80/20 and 0/100 positions

NOSEPIECE

Revolving sextuple nosepiece on ball-bearings

OBJECTIVES

High numerical infinity semi-apochromatic long working distance plan phase Fluarex PLPHFi 10x/0.30, 20x/0.45, S40x/0.60 IOS objectives enable the sub-cellular structures. An optional 60x/0.80 IOS objective is also available. The 20x, S40x and optional S60 objectives are equipped with collar adjustment ring for glass thicknesses from 0 to 1.2 mm

Fluarex objectives are made of low-absorption glass. Fluarex is a trademark of Euromex microscopen bv. All optics are anti-fungus treated and anti-reflection coated for maximum light throughput

STAGE

Stage 340 x 230 mm, equipped with a coaxial mechanical 130 x 85 mm X-Y stage. Supplied with:

- Metal insert for O 38 mm cell culture dish
- Metal insert for O 54 mm cell culture dish or 76 x 26 mm slides
- Metal insert for MultiWell plates (127.76 x 85.48 mm)
- Metal insert for Terasaki plates (83.3 x 58.0 mm)
- Optional universal cell culture holder

CONDENSER

Rotating N.A. 0.55 condenser with iris diaphragm. Working distance 26 mm. Supplied with phase contrast annuli for 10x/20x, 40x and 60x objectives and the DIC prisms for the 10x/20x/40x and 60x objectives. Three filter holders allow the insertion of Ø 38 mm filters in the optical path. The arm with condenser can be tilted backwards for convenient access to the stage. This allows easy placement of large objects like flasks and Petri dishes

MAGNIFICATION CHANGER

A magnification changer with a 1.5x lens allow intermediary magnifications of 1.5 times the standard objective magnifications. Switching from 20x to 30x or 40 to 60 and from 60x to 90x magnification can be done without the need to re-focus on the sample

FLUORESCENCE ATTACHMENT

The Delphi-X Inverso for fluorescence microscopy is supplied with a 6-position fluorescence filter set wheel and comes with two fluorescence filter sets for blue and green excitation (DI.9745 and DI.9746). On special request, the microscope can also be supplied with optimized and zero-pixel shift optimized filter sets on request. See end of this chapter

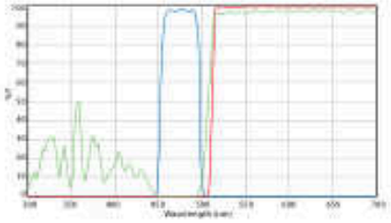

- *DI.9745 Blue excitation*
  EX 460-495 DM 505 EM 510 long pass

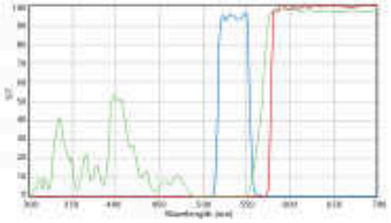

- *DI.9746 Green excitation*
  EX 510-550 DM 570 EM 575 long pass

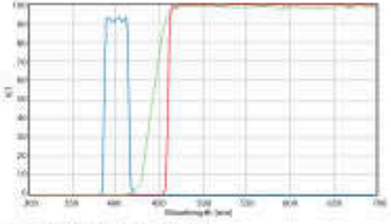

- *DI.9747 Violet excitation*
  EX 400-410 DM 455 EM 460 Long pass

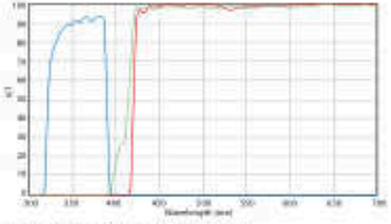

- *DI.9748 Ultra violet excitation*
  EX 330-385 DM 410 EM 420 Long pass

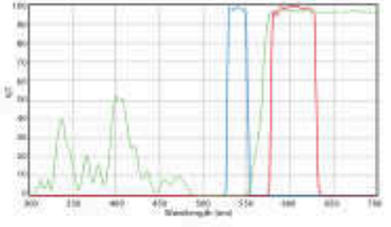

- *DI.9750.TRITC Green excitation*
  EX 528-553 DM 565 EM 578-633 band pass

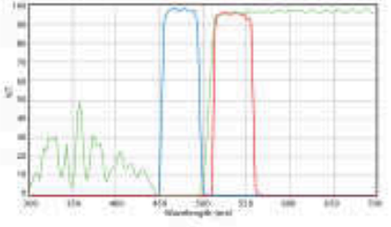

- *DI.9750.FITC Blue excitation*
  EX 460-495 DM 505 EM 510-550 band pass

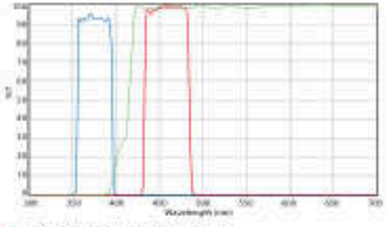

- *DI.9750.DAPI UV excitation*
  EX 360-390 DM 415 EM 435-485 band pass

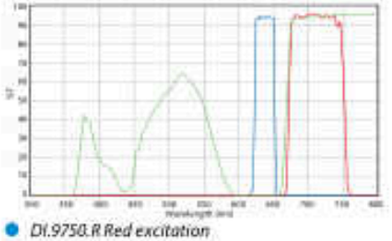

- *DI.9750.R Red excitation*
  EX 620-650 DM 660 EM 670-750 band pass

FOCUSING ADJUSTMENT

Coaxial 10 mm coarse and fine adjustments, 1 µm precision and with friction adjustment

ILLUMINATION

Fluorescence illumination with a 100 W mercury vapor lamp with external 100-240 V power supply. Transmitted 5 W LED or 100 W halogen illumination and internal power supply. Fuse holder 3.15 A / 250 V

PACKAGE CONTENT

Supplied with metal insert for Ø 38 mm cell culture dish and a metal insert for Ø 54 mm cell culture dish with 76 x 26 mm slides, metal insert for MultiWell plates, metal insert for Terasaki plates, blue and green interference Ø 45 mm filters, power cord, dust cover, green filter and alignment telescope and user manual

MODELS	10x/20x/40x PLPHFi objectives	100 W Halogen illumination	5 W LED illumination	100 W HBO fluorescence illumination	LED fluorescence illumination*
DI.3053-PLPHFi	•		•	•	o*
DI.3053-PLPHFi/HAL	•	•		•	o*

** Can be supplied optionally. Please order the LE.6400-ADD to replace the HBO illumination for the LE.6400 illuminator. See **LED light sources** in this chapter for more information*





- *6-Position fluorescence filter set wheel and 1.5 lens changer*

ACCESSORIES AND SPARE PARTS

EYEPIECES

Ø 30 mm tube

DI.6010	Super wide field SWF 10x/25 mm eyepiece
DI.6010-C	Super wide field SWF 10x/25 mm eyepiece with crosshairs
DI.6010-M	Super wide field SWF 10x/25 mm eyepiece with micrometer
DI.6010-CM	Super wide field SWF 10x/25 mm eyepiece with micrometer and crosshairs
DI.6010-SG	Super wide field SWF 10x/25 mm eyepiece with 20 x 20 square grid reticle
DI.6012	Wide field WF 12.5x/17.5 mm eyepiece
DI.6015	Wide field WF 15x/16 mm eyepiece
DI.6020	Wide field WF 20x/12 mm eyepiece
DI.6099-L	Eyecups for eyepiece

OBJECTIVES

Plan Semi-Apochromatic Fluarex infinity corrected PL-SAFi, EIS 60 mm parfocal. Recommended for fluorescence

DI.8604	4x/0.13 IOS objective, LWD 17 mm
DI.8610	10x/0.30 IOS objective*, LWD 7.4 mm. Also recommended for DIC
DI.8620	20x/0.45 IOS objective*, LWD 8 mm. Also recommended for DIC
DI.8640	40x/0.60 IOS objective*, LWD 3.3 mm. Also recommended for DIC
DI.8660	60x/0.70 IOS objective**, with built-in iris diaphragm. LWD 1.9 mm

**Coverglass correction 1.2 mm*

***Coverglass correction 0.1 - 1.3 mm*

Plan Phase Semi-Apochromatic Fluarex infinity corrected

PLPH-SAFi, EIS 60 mm parfocal

DI.8710 10x/0.30, PLPH-SAFi objective*. LWD 10.2 mm

DI.8720 20x/0.45 PLPH-SAFi objective**. LWD 7.5 to 8.8 mm

DI.8740 540x/0.60 PLPH-SAFi objective**. LWD 3 to 4.4 mm

**Coverglass correction 1.2 mm*

***Coverglass correction 0-2 mm*

LWD = Long working distance

M25 mounting thread

DIFFERENTIAL INTERFERENCE CONTRAST

DI.9690-00 DIC prism with polarizer for condenser. To be used with Plan Semi-Apo 20/40x objectives

DI.9690-10 DIC prism with polarizer for condenser. To be used with Plan Semi-Apo 10x objective

DI.9693-10 DIC prism for nosepiece to be used with Semi-Apo 10x objective

DI.9693-20 DIC prism for nosepiece to be used with Semi-Apo 20x objective

DI.9693-40 DIC prism for nosepiece to be used with Semi-Apo 40x objective

DI.9698 DIC analyzer for nosepiece

STANDARD GENERAL PURPOSE FLUORESCENCE FILTER SETS

Long pass type:

DI.9745 Fluorescence filter block for blue excitation with excitation at 460 to 495 nm, dichroic mirror at 505 nm and emission long pass filter from 510 nm

DI.9746 Fluorescence filter block for green excitation with excitation at 510 to 550 nm, dichroic mirror at 570 nm and emission long pass filter from 575 nm

DI.9747 Fluorescence filter block for violet excitation with excitation at 400 to 410 nm, dichroic mirror at 455 nm and emission long pass filter from 460 nm

DI.9748 Fluorescence filter block for ultra violet excitation with excitation at 330 to 385 nm, dichroic mirror at 410 nm and emission long pass filter from 420 nm

DI.9749 Empty cube for Delphi-X Inverso Fluorescence attachment

Band-pass type

DI.9750.TRITC

Fluorescence filter block for blue excitation with excitation at 528 to 553 nm, dichroic mirror at 565 nm and emission band pass filter at 578 to 633 nm. Suitable for TRTIC

DI.9750.FITC

Fluorescence filter block for green excitation with excitation at 460 to 495 nm, dichroic mirror at 505 nm and emission band pass filter at 510 to 550 nm. Suitable for FITC

DI.9750.DAPI

Fluorescence filter block for ultraviolet excitation with excitation at 360 to 390 nm, dichroic mirror at 415 nm and emission band pass filter at 435 to 485 nm. Suitable for DAPI

DI.9750.RED

Fluorescence filter block for red excitation with excitation at 620 to 650 nm, dichroic mirror at 660 nm and emission band pass filter at 670 to 750 nm



● *Filter cubes with fluorescence filters*

CAMERA ACCESSORIES

DI.9810 C-mount with 1x magnification for C-mount camera

DI.9840 C-mount with high resolution 0.40x objective for 1/3 inch C-mount camera

DI.9850 C-mount with high resolution relay 0.50x objective for 1/2 inch C-mount camera

MISCELLANEOUS

DI.9961 100 Watt 12 V halogen bulb

DI.9997 5 Watt LED replacement

AE.5214 500 mA 250 V fuses for LED models, 10 pieces

AE.5216 5 A 250 V fuses for halogen models, 10 pieces

SL.1385 100 W HBO mercury vapor lamp for fluorescence

DISPOSABLES

PB.5155 Microscope slides 76 x 26 mm, ground edges, 50 pieces per pack

PB.5157-W Microscope slides 76 x 26 mm, ground edges and frosted side white color, 50 pieces per pack

PB.5157-B Microscope slides 76 x 26 mm, ground edges and frosted side blue color, 50 pieces per pack

PB.5165 Coverglasses 18 x 18 mm, 0.13 - 0.17 mm, 100 pieces

PB.5168 Coverglasses 22 x 22 mm, 0.13 - 0.17 mm, 100 pieces

PB.5245 Lens cleaning paper, 100 sheets per pack

PB.5255 Immersion oil, 25 ml. Refraction index n = 1.515

PB.5274 Isopropyl alcohol 99%, 200 ml

PB.5275 Cleaning kit: lens fluid, lint free lens tissues/ paper, brush, air blower, cotton swabs

DIMENSIONS

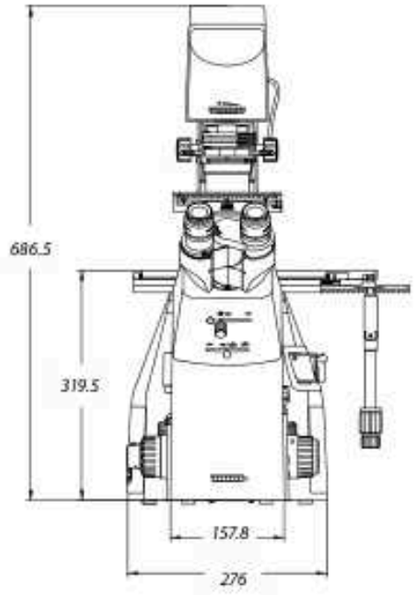

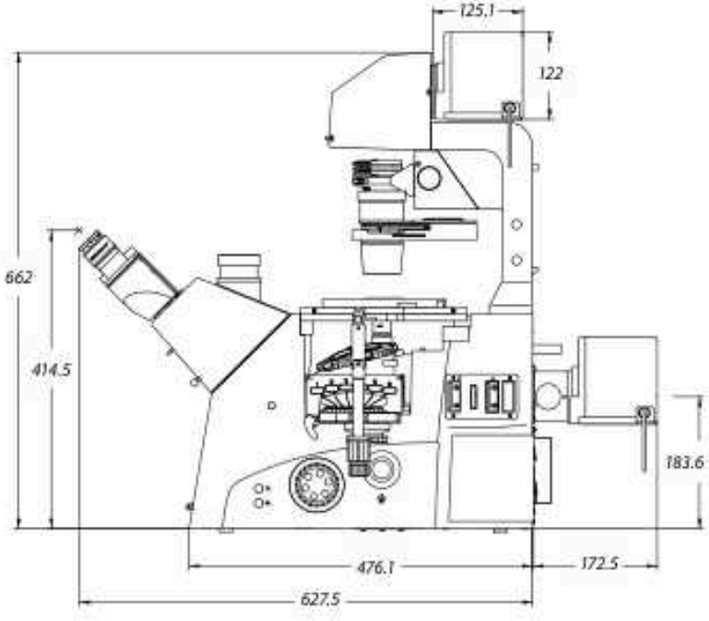

Oxion inverso



Oxion Inverso
fluorescence

The Oxion Inverso inverted microscopes for fluorescence are useful for observation of living organisms and tissue cultures in cell culture dishes and flasks

The Oxion Inverso models for fluorescence are available with brightfield and phase contrast. Dedicated objectives are suitable for 1.2 mm thick glass bottoms of cell culture dishes and flasks

- *OX.2453-PLPHF*

product information



OXION FLUORESCENCE OX.2453-PLPHF
469 (h) x 240.5 (w) x 228 mm (d) | 14.3 kg

HIGHLIGHTS

- **Life science applications**
- **Observation of tissue cultures, living cells**
- **Brightfield and phase contrast fluorescence**
- **Long working distance IOS plan achromatic objectives**
- **Revolving quintuple nosepiece**
- **5 W LED transmitted illumination**
- **100 W mercury vapor lamp for fluorescence**
- **Optional LED illumination for fluorescence**
- **10 Years warranty**



- *Oxion Inverso with LED fluorescence (LE.6400)*

SPECIFICATIONS

EYEPIECES
Pair of HWF plan 10x/22 mm eyepieces

HEAD
Trinocular 45° inclined tubes with extended low and high positions for eyepieces. One diopter adjustment on left eyepiece. Interpupillary distance of 54 to 75 mm. Trinocular head with 0-100 % beamsplitter

NOSEPIECE
Revolving quintuple nosepiece on ball-bearings

OBJECTIVES FOR BRIGHTFIELD AND FLUORESCENCE MICROSCOPY
(models OX.2253-PLF and OX.2453-PLF)
infinity color corrected long working distance plan Fluarex 10x/0.30, 20x/0.45, 40x/0.65 IOS objectives. An optional plan Fluarex 60x/0.75 IOS objective is also available

OBJECTIVES FOR PHASE CONTRAST AND FLUORESCENCE MICROSCOPY
(models OX.2253-PLPHF and OX.2453-PLPHF)
infinity color corrected long working distance plan Fluarex 10x/0.30 and plan phase Fluarex 20x/0.45 and 540x/0.65 IOS objectives

All objectives corrected for 1.2 mm thickness.
All optics are anti-fungus treated and anti-reflection coated for maximum light throughput

ICSI SET
Micromanipulator with two 3D hydraulic joysticks for Intracytoplasmic sperm injection is available for the Oxion Inverso fluorescence. See chapter 4

STAGE

Stage 250 x 230 mm equipped with a coaxial mechanical 120 x 78 mm X-Y stage, supplied with:

- Stage extension plate
- Metal insert for Ø 65 mm cell culture dish or MultiWell
- Metal insert for 76 x 26 mm slides and 54 mm cell dish (only for models with X-Y stage)
- Glass insert with Ø 30 mm hole
- Optional universal cell culture holder



● *Accessories supplied with models with mechanical X-Y stage*

CONDENSER

N.A. 0.30 condenser with iris diaphragm. Working distance 72 mm. The models for the phase contrast OX.2253-PLPHF and OX.2453-PLPHF are supplied with a slider with 4x/10x and 20x/40x pre-centered phase rings

FOCUSING ADJUSTMENT

Coaxial 25 mm coarse and fine adjustments, 2 µm precision and with friction adjustment

ILLUMINATION

Transmitted 5 W LED Intensity adjustable with internal 100-240 V power supply. Fuse holder 3.15 A / 250 V

The fluorescence models are equipped with a reflected 100 W HBO mercury vapor light source with external 100-240 V power supply, fuse holder 3.15 A / 250 V, UV protection shield

LED ILLUMINATION FOR FLUORESCENCE

Two LED sources for fluorescence are available for 4 or 9 excitation wavelengths. See our product LE.6400-OX

FILTERS FOR PHASE CONTRAST MODELS

Interference filter 550 nm green and blue filter, Ø 45 mm

STANDARD FLUORESCENCE FILTERS

(for fluorescence models)

The fluorescence models OX.2253-PLF and OX.2253-PLPHF come with brightfield and two standard filter sets for fluorescence:

- In the blue spectrum,
  OX.9745, EX465-495 (BP) DM505 (LP) EM515-555 (BP)
- In the green spectrum,
  OX.9746, EX540-580 (BP) DM600 (LP) EM605-665 (BP)

The fluorescence models OX.2453-PLF and OX.2453-PLPHF come with brightfield and three standard filter sets for fluorescence:

- In the blue spectrum,
  OX.9745, EX465-495 (BP) DM505 (LP) EM515-555 (BP)
- In the green spectrum,
  OX.9746, EX540-580 (BP) DM600(LP) EM605-665 (BP)
- In the UV spectrum,
  OX.9747, EX361-389 (BP) DM415 (LP) EM435-485 (BP)

On special request, the microscope can also be supplied with optimized and zero-pixel shift optimized filter sets on request. See end of this chapter

PACKAGE CONTENT

Supplied with metal insert with Ø 25 mm hole, metal insert for Ø 35 mm cell culture dish, blue LBD and green 550 nm interference Ø 45 mm filter, power cord, dust cover and user manual. Phase contrast models are supplied with 4x/10x and 20x/40x phase contrast annuli in slider, green filter and alignment telescope



● *Standard accessory*

MODELS	LWD Plan Fluarex 10x/ 20x/40x objectives	LWD Plan Fluarex 10x/, plan phase Fluarex 20x/40x objectives	3-position rail (BF, Blue & Green)	4-position rail (BF, Blue, Green & UV)	Mechanical stage	LED fluorescence illumination*
OX.2253-PLF	•		•		•	o*
OX.2453-PLF	•			•	•	o*
OX.2253-PLPHF		•	•		•	o*
OX.2453-PLPHF		•		•	•	o*

** Can be supplied optionally. Please order the LE.6400-ADD to replace the HBO illumination for the LE.6400 illuminator. See **LED light sources** in this chapter for more information*

Fluarex objectives are made of low-absorption glass for fluorescence applications

Fluarex is a trademark of Euromex microscopen bv

LWD = long working distance

ACCESSORIES & SPARE PARTS

EYEPIECES

Ø 30 mm tube

OX.6010 HWF 10x/22 mm eyepiece

OX.6015 HWF 15x/16 mm eyepiece

OX.6110 HWF 10x/22 mm eyepiece with micrometer reticule

OX.6099 Pair of eyecups

Plan Fluarex infinity corrected PLFi, for brightfield and fluorescence [1]

OX.8604 4x/0.13 PLFi objective, LWD 18.95 mm

OX.8610 10x/0.30 PLFi objective, LWD 7.27 mm

OX.8620 20x/0.45 PLFi objective, LWD 6.03 mm

OX.8640 40x/0.65 PLFi objective, LWD 1.79 mm

OX.8660 60x/0.75 PLFi objective, LWD 1.28 mm

Plan Phase Fluarex infinity corrected PLPHFi for fluorescence AND phase contrast [1] [2] [3]

OX.8720 20x/0.45 PLPHFi objective. LWD 6.12 mm

OX.8740 40x/0.65 PLPHFi objective. LWD 1.79 mm

[1] *All objectives corrected for 1 mm coverglass thickness except OX.8304*

[2] *Phase contrast objectives require slider with phase contrast annuli OX.9163*

[3] *Phase contrast objectives require slider with phase contrast annuli OX.9163*

All optical parts are anti-fungus treated

LWD = Long working distance

STANDARD GENERAL PURPOSE FLUORESCENCE FILTER SETS:

OX.9745 Fluorescence filter block for blue excitation 465-495 nm

OX.9746 Fluorescence filter block for green excitation 540-580 nm

OX.9747 Fluorescence filter block for ultra violet excitation 361-389 nm

OX.9748 Fluorescence filter block for violet excitation 415-445 nm

PHASE CONTRAST ATTACHMENTS

OX.9148 Telescope for phase contrast fluorescence alignment

OX.9149 Telescope for phase contrast alignment

OX.9190 Slider with 4x/10x and 20x/40x phase contrast annuli

CAMERA ACCESSORIES

OX.9810 C mount with 1.0x objective

OX.9833 C-mount adapter with 0.33x objective for Oxion microscopes and 1/3" cameras

OX.9850 C-mount adapter with 0.5x objective for Oxion and Oxion Inverso microscopes and 1/2" cameras

AE.5120-2 Trinocular 23.2 mm tube for Oxion photo port revision-2

AE.5130 Universal SLR camera adapter with 2x projection lens for 23.2 mm tubes. Needs T2 adapter and AE.5120-2

AE.5025 T2 adapter for Nikon D digital SLR cameras

AE.5040 T2 adapter for Canon EOS digital SLR cameras

STAGES AND HOLDERS

OX.9500 Mechanical coaxial X-Y 120 x 78 mm stage

OX.9506 Transparent glass insert with Ø 30 mm hole

OX.9508 Metal insert with Ø 25 mm hole

OX.9510 Metallic insert for Ø 65 mm cell culture dish and MultiWell

OX.9512 Metal insert with 76 x 26 mm slide holder and Ø 55 mm cell culture dish holder

OX.9535 Metal insert for Ø 35 mm cell culture dish holder

OX.9550 Stage extension plate

OX.9599 Universal cell culture dish holder

AE.8010 Heating stage with transparent glass plate for AE.8000 Micromanipulator, including digital temperature controller



● *OX.9599*

MICROMANIPULATOR ATTACHMENT

AE.8000 Micromanipulator for intracytoplasmic sperm injection (ICSI) suitable for the Oxion Inverso inverted microscope

MISCELLANEOUS

OX.9700 Blue filter Ø 45 mm

OX.9985 5 W NeoLED™ replacement unit

AE.3199 Glass fuses 3.15 A 250 V packed, per 10 pieces

SL.1385 100 W HBO mercury vapor lamp for fluorescence

OX.9703 IR cut-off filter

OX.9749 Empty filter block

OX.9753 Filter block rail, three positions, without filters

OX.9754 Filter block rail, four positions, without filters

DISPOSABLES

PB.5155 Microscope slides 76 x 26 mm, ground edges, 50 pieces

PB.5165 Coverglasses 18 x 18 mm, thickness 0.13 - 0.17 mm, 100 pieces

PB.5168 Coverglasses 22 x 22 mm, thickness 0.13 - 0.17 mm, 100 pieces

PB.5245 Lens cleaning paper, 100 sheets per pack

PB.5255 Immersion oil, n = 1.482 (25 ml)

PB.5274 Isopropyl alcohol 99% (200 ml)

PB.5275 Cleaning kit: lens cleaning fluid, lint free lens tissues, brush, air blower, cotton swabs



● *Accessories supplied with phase contrast models*

DIMENSIONS

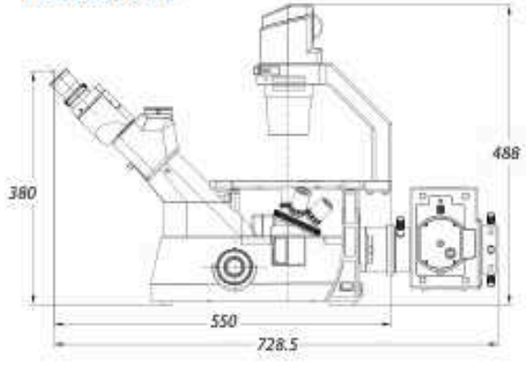

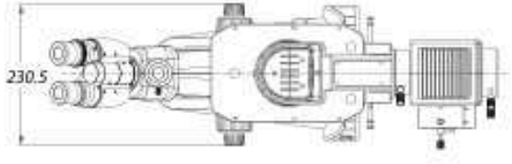

STANDARD GENERAL PURPOSE FLUORESCENCE FILTER SETS

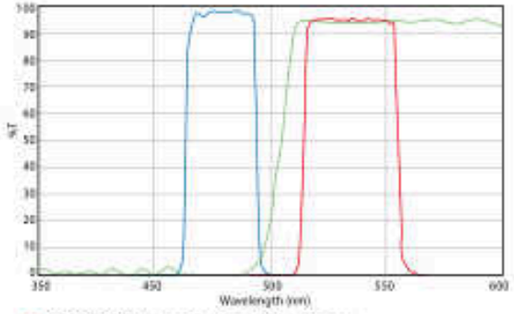

● **OX.9745 Blue excitation 465-495 nm**

FITC EX465-495 (BP) DM505 (LP) EM515-555 (BP)

Also suitable for: Acridine Orange + DNA, Alexa Fluor 488, Atto 488, Azami Green, BODIPY FL/pH7.2, Calcein, Calcium Green-1, Cy2, DiO, DyLight 488, EGFP, Emerald GFP, FAM, FITC, Fluo-4, GFP LysoTracker Green/pH 5.2, MitoTracker Green FM/MeOH, mWasabi, Oregon Green 488, SYBR Green I, SYTO 9/DNA, ZsGreen

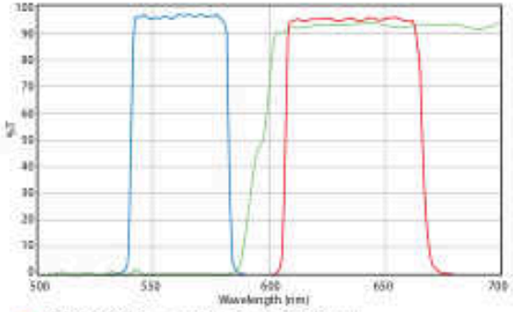

● **OX.9746 Green excitation 540-580 nm**

Texas Red / mCherry / Alexa Fluor 594

EX540-580 (BP) DM600 (LP) EM605-665 (BP)

Also suitable for: Alexa Fluor 568, Alexa Fluor 594, CAL Fluor Red 610, Cy3.5, DyLight 594, FusionRed, Killer Red, mCherry, MitoTracker Red/MeOH, mKate2, mRFP1, ReAsH-CCPGCC, Rhodamine Red-X, ROX, Sulforhodamine 101, Texas Red, Texas Red-X, X-rhod-1/Ca2+

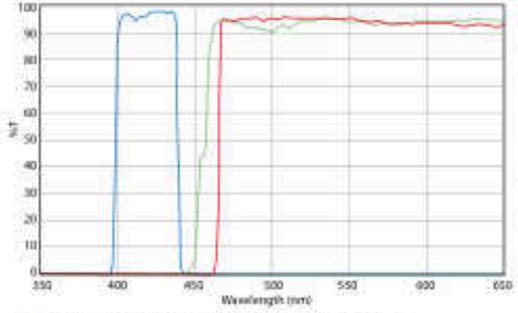

● **OX.9747 Ultra-Violet excitation 361-381 nm**

DAPI / Hoechst / Alexa Fluor 350

350 EX361-389 (BP) D415 (LP) EM435-485 (BP)

Also suitable for: Alexa Fluor 350, Biosearch Blue, Coumarin, DAPI, DyLight 350, Hoechst 33258, LysoTracker Blue/MeOH

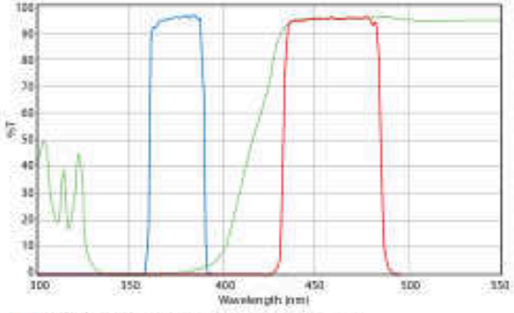

● **OX.9748 Violet excitation 415-445 nm**

UV/DAPI/Hoechst/AlexaFluor 350

EX415-445 (BP) DM455 (LP) EM465-495 (BP)

The fluorescence microscopes can be equipped with more specific, optimized and application related fluorescence filter sets, see accessories section and/or separate fluorescence filter catalog

euromex.academy

FluoLED



● *LE.6400*

LED light source
for fluorescence

Euromex offers two high-end and extremely easy-to-use LED light sources for fluorescence applications that can replace mercury vapor HBO light sources of our microscope solutions for fluorescence

The standard LE.6400 system has a 100-240 V power supply/ intensity control unit with keyboard for selection and intensity adjustment of four wavelength bands. Standard fits for all models, except Oxion inverso. For that model we offer LE.6400-OX. For other brand microscopes we offer adapters

product information

HIGHLIGHTS

- **Stand-alone operation**
- **Easy mounting and operation**
- **4 Excitation wavelengths-bands are available**
- **2 Years warranty**



● *Keyboard pad*

LAMPHOUSE	95 (h) x 80 (w) x 130 (d) | 1.30 kg
CONTROLLER	75 (h) x 150 (w) x 205 (d) | 0.90 kg

SPECIFICATIONS

LAMPHOUSE

The lamphouse can be mounted with a specific adapter on a Euromex Delphi-X Observer, iScope and Oxion upright microscopes as well as for our Oxion Inverso and Delphi-X Inverso inverted models. For other brands, contact Euromex

CONTROLLER

The standard LE.6400 system has a 100-240 V power supply/ intensity control unit for selection and intensity adjustment of four wavelength bands



LE.6400

Band	Wavelength	FWHM (nm)	Range	Color	Power (mW)
1	365	18	330-380	Ultra violet	≥ 2000
5	470	24	450-490	Blue	≥ 900
6	525	40	505-545	Green	≥ 500
8B	630	30	620-640	Red	≥ 600

LE.6400-OX

Band	Wavelength	FWHM (nm)	Range	Color	Power (mW)
1	365	18	330-380	Ultra violet	≥ 2000
5	470	24	450-490	Blue	≥ 900
7B	560	40	540-580	Emerald green	≥ 600
8B	630	30	620-640	Red	≥ 600

FLUORESCENCE FILTER SETS

For ordering a specific fluorescence filter set find the fluorochrome you need and add the filter set reference 'xxxx' as follows:

FOR ISCOPE:

IS.9750.xxxx/6, iScope with 6-position fluorescence attachment, needs also empty block IS.9749/6

IS.9750.xxxx/3 iScope with 3-position fluorescence attachment, needs also empty block IS.9749/3

FOR DZ SERIES:

DZ.9750.xxxx, this set is supplied with two emission filters and also needs empty block DZ.9749

EXAMPLE:
the reference for the iScope
with a 39001 filter set is IS.9750.39001

FOR DELPHI-X OBSERVER/INVERSO:

DX.9750.xxxx, Delphi-X Observer with 6-position fluorescence attachment, needs also empty block DX.9749/6

DI.9750.xxxx, Delphi-X Inverso with 6-position fluorescence attachment, needs also empty block DI.9749/6

FOR OXION SERIES:

OX.9750.xxxx Oxion inverso with 3-position fluorescence attachment, needs also empty block OX.9749/3

OX.9750.xxxx Oxion inverso with 4-positions fluorescence attachment, needs also empty block OX.9749/4

AE.3250.xxxx, Oxion upright with 4-positions fluorescence attachment, needs also empty block AE.3249



● *AE.3248*

OPTIMIZED FILTER SETS

19xxx series is an optimized filter set with long pass filter
39xxx series is a standard optimized filter set
49xxx series is a zero-pixel shift optimized filter set

Acridine Orange DNA - EX: 500 nm EM: 526 nm
EX: **465-495** nm DM 505 nm EM: **515** nm (LP) • **19002**
EX: **465-495** nm DM 505 nm EM: **590-650** nm • **39009**
EX: **460-500** nm DM 510 nm EM: **510-560** nm • **49011**

Acridine Orange DNA+RNA - EX: 500 nm EM: 526 nm
EX: **465-495** nm DM 505 nm EM: **515** nm (LP) • **19002**
EX: **460-500** nm DM 510 (LP) EM: **510** nm **(LP)** • **19012**

Alexa Fluor 488 - EX: 498 nm EM: 520 nm
EX: **460-500** nm DM 510 nm EM: **510-560** nm • **49011**

Alexa Fluor 514 - EX: 517 nm EM: 539 nm
EX: **485-505** nm DM 515 nm EM: **525-555** nm • **39003**
EX: **490-510** nm DM 515 nm EM: **520-550** nm • **49003**

Alexa Fluor 546 - EX: 556 nm EM: 573 nm
EX: **528-553** nm DM 565 nm EM: **578-633** nm • **39004**
EX: **532-557** nm DM 605 nm EM: **570-640** nm • **49004**

Alexa Fluor 555 - EX: 553 nm EM: 568 nm
EX: **528-553** nm DM 565 nm EM: **578-633** nm • **39004**
EX: **532-557** nm DM 605 nm EM: **570-640** nm • **49004**

Alexa Fluor 568 - EX: 578 nm EM: 603 nm
EX: **540-580** nm DM 600 nm EM: **615-665** nm • **39010**
EX:**540-580** nm DM 585 nm EM: **593-667** nm • **49008**

Alexa Fluor 594 - EX: 590 nm EM: 617 nm
EX: **540-580** nm DM 600 nm EM: **615-665** nm • **39010**

Alexa Fluor 647 - EX: 649 nm EM: 666 nm
EX: **595-645** nm DM 655 nm EM: **665-715** nm • **39007**
EX: **590-650** nm DM 660 nm EM: **663-737** nm • **49006**
EX: **625-655** nm DM 660 nm EM: **665-715** nm • **49009**

AmCyan - EX: - 458 nm EM: 489 nm
EX: **425-445** nm DM 455 nm EM: **465-495** nm • **39001**

Auramine longpass - EX: 460 nm EM: 550 nm
EX: **425-475** nm DM 485 nm EM: **495** nm (LP) • **19008**

Auramine-rhodamine - EX: 450 nm EM: 550 nm
EX: **465-495** nm DM 505 nm EM: **515** nm (LP) • **19002**

Azami Green - EX: 492 nm EM: 505 nm
EX: **465-495** nm DM 505 nm EM: **515-555** nm • **39002**
EX: **450-490** nm DM 525 nm EM: **500-550** nm • **49002**

Biosearch Blue - EX: 352 nm EM: 447 nm
EX: **361-389** nm DM 415 nm EM: **435-485** nm • **39000**

BODIPY FL/pH7.2 - EX: 505 nm EM: 512 nm
EX: **465-495** nm DM 505 nm EM: **515-555** nm • **39002**
EX: **450-490** nm DM 525 nm EM: **500-550** nm • **49002**

CAL Fluor Red 590 - EX: 569 nm EM: 591 nm
EX: **528-553** nm DM 565 nm EM: **578-633** nm • **39004**
EX: **532-557** nm DM 605 nm EM: **570-640** nm • **49004**

CAL Fluor Red 610 - EX: 590 nm EM: 610 nm
EX: **540-580** nm DM 600 nm EM: **615-665** nm • **39010**

Calcein - EX: 494 nm EM: 517 nm
EX: **465-495** nm DM 505 nm EM: **515-555** nm • **39002**
EX: **450-490** nm DM 525 nm EM: **500-550** nm • **49002**
EX: **460-500** nm DM 510 nm EM: **510-560** nm • **49011**

Calcium Green-1 - EX: 506 nm EM: 531 nm
EX: **465-495** nm DM 505 nm EM: **515-555** nm • **39002**
EX: **450-490** nm DM 525 nm EM: **500-550** nm • **49002**
EX: **460-500** nm DM 510 nm EM: **510-560** nm • **49011**

Calcofluor White - EX: 350 nm EM: 475 nm
EX: **361-389** nm DM: 415 nm EM: **435** nm (LP) • **19000**
EX: **361-389** nm DM: 415 nm EM: **515** nm (LP) • **19012**

Cerulean - EX: 433 nm EM: 475 nm
EX: **425-445** nm DM 455 nm EM: **465-495** nm • **39001**

CFP - EX: 433 nm EM: 475 nm
EX: **425-445** nm DM 455 nm EM: **465-495** nm • **39001**

Citrine - EX: 514 nm EM: 529 nm
EX: **485-505** nm DM 515 nm EM: **525-555** nm • **39003**
EX: **490-510** nm DM 515 nm EM: **520-550** nm • **49003**

Coumarin - EX: 384 nm EM: 470 nm
EX: **390-420** nm DM: 440 nm EM: **450** nm (LP) • **19011**

Cy2 - EX: 489 nm EM: 506 nm
EX: **465-495** nm DM 505 nm EM: **515-555** nm • **39002**
EX: **450-490** nm DM 525 nm EM: **500-550** nm • **49002**
EX: **460-500** nm DM 510 nm EM: **510-560** nm • **49011**

Cy3.5 - EX: 581 nm EM: 598 nm
EX: **540-580** nm DM 600 nm EM: **615-665** nm • **39010**
EX:**540-580** nm DM 585 nm EM: **593-667** nm • **49008**

Cy3 - EX: 552 nm EM: 570 nm
EX: **528-553** nm DM 565 nm EM: **578-633** nm • **39004**
EX: **532-557** nm DM 605 nm EM: **570-640** nm • **49004**

Cy5 - EX: 649 nm EM: 670 nm
EX: **595-645** nm DM 655 nm EM: **665-715** nm • **39007**
EX: **590-650** nm DM 660 nm EM: **663-737** nm • **49006**
EX: **625-655** nm DM 660 nm EM: **665-715** nm • **49009**

Cy7 - EX: 743 nm EM: 767 nm
EX: **672-747** nm DM 760 nm EM: **765-855** nm • **49007**

DAPI - EX: 359 nm EM: 461 nm
EX: **361-389** nm DM 415 nm EM: **435-485** nm • **39000**
EX: **361-389** nm DM 415 nm EM: **435** nm (LP) • **19000**
EX: **361-389** nm DM 415 nm EM: **435-485** nm • **39000**
EX: **325-375** nm DM 400 EM: **435-485** nm• **49000**

Draq5 - EX: 647 nm EM: 683 nm
EX: **595-645** nm DM 655 nm EM: **665-715** nm • **39007**

DsRed - EX: 557 nm EM: 584 nm
EX: **528-553** nm DM 565 nm EM: **578-633** nm • **39004**
EX: **532-557** nm DM 605 nm EM: **570-640** nm • **49004**

DyLight 350 - EX: 352 nm EM: 435 nm
EX: **361-389** nm DM 415 nm EM: **435-485** nm • **39000**

DyLight 405 - EX: 399 nm EM: 433 nm
EX: **390-420** nm DM: 440 nm EM: **450** nm (LP) • **19011**

DyLight 488 - EX: 492 nm EM: 517 nm
EX: **465-495** nm DM 505 nm EM: **515-555** nm • **39002**
EX: **450-490** nm DM 525 nm EM: **500-550** nm • **49002**
EX: **460-500** nm DM 510 nm EM: **510-560** nm • **49011**

DyLight 549 - EX: 554 nm EM: 569 nm
EX: **528-553** nm DM 565 nm EM: **578-633** nm • **39004**
EX: **532-557** nm DM 605 nm EM: **570-640** nm • **49004**

DyLight 594 - EX: 592 nm EM: 616 nm
EX: **540-580** nm DM 600 nm EM: **615-665** nm • **39010**
EX:**540-580** nm DM 585 nm EM: **593-667** nm • **49008**

DyLight 649 - EX: 652 nm EM: 667 nm
EX: **595-645** nm DM 655 nm EM: **665-715** nm • **39007**
EX: **590-650** nm DM 660 nm EM: **663-737** nm • **49006**
EX: **625-655** nm DM 660 nm EM: **665-715** nm • **49009**

DyLight 750 - EX: 751 nm EM: 772 nm
EX: **672-747** nm DM 760 nm EM: **765-855** nm • **49007**

FLUORESCENCE FILTER SETS (continued)

ECFP - EX: 434 nm EM: 477 nm
EX: 425-445 nm DM 455 nm EM: 465-495 nm • **39001**

EGFP - EX: 488 nm EM: 507 nm
EX: 465-495 nm DM 505 nm EM: 515-555 nm • **39002**
EX: 450-490 nm DM 525 nm EM: 500-550 nm • **49002**

Emerald GFP - EX: 489 nm EM: 510 nm
EX: 465-495 nm DM 505 nm EM: 515-555 nm • **39002**
EX: 450-490 nm DM 525 nm EM: 500-550 nm • **49002**

EYFP/pH 7 - EX: 514 nm EM: 527 nm
EX: 485-505 nm DM 515 nm EM: 525-555 nm • **39003**
EX: 490-510 nm DM 515 nm EM: 520-550 nm • **49003**

FITC - EX: 490 nm EM: 525 nm
EX: 465-495 nm DM 505 nm EM: 515-555 nm • **39002**
EX: 450-490 nm DM 525 nm EM: 500-550 nm • **49002**
EX: 460-500 nm DM 510 nm EM: 510-560 nm • **49011**
EX: 465-495 nm DM 505 nm EM: 515 nm (LP) • **19002**
EX: 465-495 nm DM 505 nm EM: 515-555 nm • **39002**
EX: 450-490 nm DM 525 nm EM: 500-550 nm • **49002**
EX: 460-500 nm DM 510 nm EM: 510-560 nm • **49011**

Fluo-4 - EX: 494 nm EM: 516 nm
EX: 465-495 nm DM 505 nm EM: 515-555 nm • **39002**
EX: 450-490 nm DM 525 nm EM: 500-550 nm • **49002**
EX: 460-500 nm DM 510 nm EM: 510-560 nm • **49011**

FluoroGold - EX: 390 nm EM: 600 nm
EX: 361-389 nm DM: 415 nm EM: 515 nm (LP) • **19012**

FM 1-43 - EX: 479 nm EM: 598 nm
EX: 465-495 nm DM: 505 nm EM: 600 nm (LP) • **19010**

FM 4-64 - EX: 515 nm EM: 740 nm
EX: 540-580 nm DM: 600 nm EM: 610 nm (LP) • **19006**

FM 4-64 - EX: 515 nm EM: 740 nm
EX: 465-495 nm DM: 505 nm EM: 600 nm (LP) • **19010**

FusionRed - EX: 576 nm EM: 603 nm
EX: 540-580 nm DM 600 nm EM: 615-665 nm • **39010**
EX:540-580 nm DM 585 nm EM: 593-667 nm • **49008**

GFP - EX: 488 nm EM: 507 nm
EX: 465-495 nm DM 505 nm EM: 515-555 nm • **39002**
EX: 450-490 nm DM 525 nm EM: 500-550 nm • **49002**

Hoechst 33258 - EX: 352 nm EM: 461 nm
EX: 361-389 nm DM 415 nm EM: 435-485 nm • **39000**
EX: 325-375 nm DM 400 EM: 435-485 nm• **49000**

Lucifer Yellow - EX: 428 nm EM: 540 nm
EX: 400-440 nm DM 455 nm EM: 515-555 nm • **39008**

LysoTracker Blue/MeOH - EX: 373 nm EM: 425 nm
EX: 361-389 nm DM 415 nm EM: 435-485 nm • **39000**

LysoTracker Green/pH 5.2 - EX: 504 nm EM: 511 nm
EX: 465-495 nm DM 505 nm EM: 515-555 nm • **39002**
EX: 450-490 nm DM 525 nm EM: 500-550 nm • **49002**

LysoTracker Red/pH 5.2 - EX: 577 nm EM: 590 nm
EX:540-580 nm DM 585 nm EM: 593-667 nm • **49008**

LysoTracker Yellow HCK-123 - EX: 486 nm EM: 563 nm
EX: 465-495 nm DM 505 nm EM: 590-650 nm • **39009**

mCherry - EX: 587 nm EM: 610 nm
EX: 540-580 nm DM 600 nm EM: 615-665 nm • **39010**
EX:540-580 nm DM 585 nm EM: 593-667 nm • **49008**

mCitrine - EX: 514 nm EM: 529 nm
EX: 485-505 nm DM 515 nm EM: 525-555 nm • **39003**
EX: 490-510 nm DM 515 nm EM: 520-550 nm • **49003**

MitoTracker Green FM/MeOH - EX: 490 nm EM: 516 nm
EX: 465-495 nm DM 505 nm EM: 515-555 nm • **39002**
EX: 450-490 nm DM 525 nm EM: 500-550 nm • **49002**

MitoTracker Orange/MeOH - EX: 551 nm EM: 576 nm
EX: 528-553 nm DM 565 nm EM: 578-633 nm • **39004**
EX: 532-557 nm DM 605 nm EM: 570-640 nm • **49004**

MitoTracker Red/MeOH - EX: 578 nm EM: 599 nm
EX: 540-580 nm DM 600 nm EM: 615-665 nm • **39010**
EX:540-580 nm DM 585 nm EM: 593-667 nm • **49008**

MitoTracker Deep Red 633/MeOH - EX: 644 nm EM: 665 nm
EX: 590-650 nm DM 660 nm EM: 663-737 nm • **49006**
EX: 625-655 nm DM 660 nm EM: 665-715 nm • **49009**

mRFP1 - EX: 584 nm EM: 607 nm
EX: 540-580 nm DM 600 nm EM: 615-665 nm • **39010**
EX:540-580 nm DM 585 nm EM: 593-667 nm • **49008**

mWasabi - EX: 493 nm EM: 509 nm
EX: 465-495 nm DM 505 nm EM: 515-555 nm • **39002**
EX: 450-490 nm DM 525 nm EM: 500-550 nm • **49002**

Nile Blue - EX: 631 nm EM: 660 nm
EX: 590-650 nm DM 660 nm EM: 663-737 nm • **49006**

Oregon Green 488 - EX: 490 nm EM: 514 nm
EX: 465-495 nm DM 505 nm EM: 515-555 nm • **39002**
EX: 450-490 nm DM 525 nm EM: 500-550 nm • **49002**

Oregon Green 514 - EX: 506 nm EM: 526 nm
EX: 485-505 nm DM 515 nm EM: 525-555 nm • **39003**
EX: 490-510 nm DM 515 nm EM: 520-550 nm • **49003**

Pacific Blue - EX: 405 nm EM: 455 nm
EX: 390-420 nm DM: 440 nm EM: 450 nm (LP) • **19011**

Propidium Iodide - EX: 536 nm EM: 617 nm
EX: 528-552 nm DM 565 nm EM: 590-650 nm • **39005**
EX: 530-560 nm DM 570 nm EM: 590-650 nm • **49005**

Pulsar 650 - EX: 460 nm EM: 650 nm
EX: 465-495 nm DM: 505 nm EM: 600 nm (LP) • **19010**

Quasar 670 - EX: 647 nm EM: 670 nm
EX: 595-645 nm DM 655 nm EM: 665-715 nm • **39007**

Rhod-2 - EX: 552 nm EM: 581 nm
EX: 528-553 nm DM 565 nm EM: 578-633 nm • **39004**
EX: 532-557 nm DM 605 nm EM: 570-640 nm • **49004**

Rhodamine 123 - EX: 507 nm EM: 529 nm
EX: 485-505 nm DM 515 nm EM: 525-555 nm • **39003**
EX: 490-510 nm DM 515 nm EM: 520-550 nm • **49003**

Rhodamine Red-X - EX: 570 nm EM: 590 nm
EX: 540-580 nm DM 600 nm EM: 615-665 nm • **39010**
EX:540-580 nm DM 585 nm EM: 593-667 nm • **49008**

Sulforhodamine 101 - EX: 586 nm EM: 605 nm
EX: 540-580 nm DM 600 nm EM: 615-665 nm • **39010**

SYBR Green I - EX: 498 nm EM: 522 nm
EX: 465-495 nm DM 505 nm EM: 515-555 nm • **39002**
EX: 450-490 nm DM 525 nm EM: 500-550 nm • **49002**
EX: 460-500 nm DM 510 nm EM: 510-560 nm • **49011**

SYTO 9/DNA - EX: 483 nm EM: 500 nm
EX: 465-495 nm DM 505 nm EM: 515-555 nm • **39002**
EX: 450-490 nm DM 525 nm EM: 500-550 nm • **49002**
EX: 460-500 nm DM 510 nm EM: 510-560 nm • **49011**

SYTO 60 - EX: 652 nm EM: 678 nm
EX: 595-645 nm DM 655 nm EM: 665-715 nm • **39007**
EX: 590-650 nm DM 660 nm EM: 663-737 nm • **49006**
EX: 625-655 nm DM 660 nm EM: 665-715 nm • **49009**

TagRFP - EX: 556 nm EM: 584 nm
EX: 528-553 nm DM 565 nm EM: 578-633 nm • **39004**

TAMRA - EX: 555 nm EM: 580 nm
EX: 528-553 nm DM 565 nm EM: 578-633 nm • **39004**
EX: 532-557 nm DM 605 nm EM: 570-640 nm • **49004**

Texas Red - EX: 595 nm EM: 620 nm
EX: 540-580 nm DM 600 nm EM: 615-665 nm • **39010**
EX:540-580 nm DM 585 nm EM: 593-667 nm • **49008**

Texas Red-X - EX: 595 nm EM: 615 nm
EX: 540-580 nm DM 600 nm EM: 615-665 nm • **39010**
EX:540-580 nm DM 585 nm EM: 593-667 nm • **49008**

TO-PRO-3 - EX: 642 nm EM: 661 nm
EX: 595-645 nm DM 655 nm EM: 665-715 nm • **39007**

Topaz - EX: 514 nm EM: 529 nm
EX: 485-505 nm DM 515 nm EM: 525-555 nm • **39003**
EX: 490-510 nm DM 515 nm EM: 520-550 nm • **49003**

TRITC - EX: 555 nm EM: 580 nm
EX: 528-553 nm DM 565 nm EM: 578-633 nm • **39004**

Turbo FP650 - EX: 592 nm EM: 650 nm
EX: 540-580 nm DM: 600 nm EM: 610 nm (LP) • **19006**
EX:540-580 nm DM 585 nm EM: 593-667 nm • **49008**

wtGFP - EX: 475 nm EM: 509 nm
EX: 425-475 nm DM 485 nm EM: 495 nm (LP) • **19008**

X-rhod-1/Ca2+ - EX: 580 nm EM: 601 nm
EX: 540-580 nm DM 600 nm EM: 615-665 nm • **39010**

ZsGreen1 - EX: 493 nm EM: 505 nm
EX: 465-495 nm DM 505 nm EM: 515-555 nm • **39002**

FLUORESCENCE FILTER SETS (continued)

OPTIMIZED FISH SINGLE BAND FILTERS

DAPI 395 nm FISH single band
EX: 385-407 nm DM 425 EM: 435-485 • 49028

Blue FISH single band
EX: 400-410 nm DM 425 EM: 442-478 • 49301

Aqua FISH single band
EX: 426-446 nm DM 425 EM: 465-495 • 49302

Green#1 FISH single band
EX: 483-507 nm DM 515 EM: 522-551) • 49303

Green#2 FISH single band
EX: 473-497 nm DM 515 EM: 510-540 • 49308

Green#3 Narrow band FISH single band
EX: 480-500 nm DM 505 EM: 515-535 • 49312

Gold FISH single band
EX: 541-551 nm DM 556 EM: 560-583 • 49304

Orange#1 FISH single band
EX: 535-557 nm DM 565 EM: 573-606 • 49305

Orange#2 FISH single band
EX: 529-550 nm DM 556 EM: 561-592 • 49309

Red#1 FISH single band
EX: 568-592 nm DM 600 EM: 595-640 • 49306

Red#2 FISH single band
EX: 581-602 DM 610 EM: 615-645 • 49310

Red#3 Narrow band FISH single band
EX: 592-605 nm DM 612 EM: 618-646 • 49311

Far Red FISH single band
EX: 620-640 nm DM 647 EM: 637-697 • 49307

Cy5 Narrow Excitation single band
EX: 625-655 nm DM 660 EM: 665-715 • 49009

OPTIMIZED FISH DUAL BAND FILTERS

DAPI/Green FISH dual band 3 filters
EX: 380-410 / EX: 470-495, DM 424-462 / 515-560 / 610-660,
EM: 515-540 / EM: 615-645 • 59001v2

DAPI/Orange FISH dual band 3 filters
EX: 380-405 / 530-560, DM 430-495 / 570-615,
EM: 445-475 / 570-610 • 59002v2

DAPI/Red FISH dual band 3 filters
EX: 380-405 / EX: 565-590, DM 445-475 / 605-650
EM: 445-475 / EM: 605-645 • 59003v2

Green/Red #1 FISH dual band 3 filters
EX: 480-500 / EX: 574-594, DM 424-462 / 510-560 / 610-660,
EM: 515-540 / EM: 615-640 • 59010

Green/Orange #1 FISH dualband 3 filters
EX: 465-490 / EX: 550-570, DM 425-455 / 505-535 / 590-625,
EM: 425-455 / EM: 505-535) EM: 590-620 • 59011

Green/Orange #2 FISH dualband 3 filters
EX: 460-485 / EX: 540-560, DM 500-530 / 575-620,
EM: 500-530 / EM: 575-620 • 59012

Aqua/Gold FISH dualband 3 filters
EX: 430-445 / EX: 525-545, DM 465-495 / 565-595,
EM: 470-490 / EM: 570-590 • 59033

OPTIMIZED FISH TRIPLE BAND FILTERS

ECFP/EYFP/mCherry triple band 3 filters
EM: 430-445 / EM: 495-510 / EM: 565-585,
DM 455-480 / 520-550 / 600-660,
EM: 460-480 / EM: 520-550 / EM: 605-660 • 69008

DAPI/Green/Orange #1 FISH triple band 3 filters
EX: 380-405 / EX: 465-490 / EX: 550-570,
DM 425-450 / 505-535 / 590-625
EM: 425-450 / EM: 505-535 / EM: 590-620 • 69013v2

DAPI/Green/Red FISH triple band 3 filters
EX: 380-405 / EX: 480-495 / EX: 575-590
DM 425-460 / 515-560 / 610-655
EM: 425-460 / EM: 515-560 / EM: 610-655 • 69015

Aqua/Green/Orange FISH triple band 3 filters
EX: 425-445 / EX: 490-505 / EM: 550- 560
DM 460-475 / 520-540 / 590-630
EM: 460-475 / EM: 520-540 / EM: 595-625 • 69011

DAPI/Aqua/Green/Orange FISH triple band 3 filters
EX: 380-390 / EX: 420-440 / EX: 555-575
DM 455-475 / 518-540 / 590-628
EM: 460-475 / EM: 518-540 / EM: 595-630 • 69014**EX:** 620-640 **nm DM 647 EM:** 637-697 • 49307

Cy5 Narrow Excitation single band
EX: 625-655 nm DM 660 EM: 665-715 • 49009

OPTIMIZED FISH DUAL BAND FILTERS

DAPI/Green FISH dual band 3 filters
EX: 380-410 / EX: 470-495, DM 424-462 / 515-560 / 610-660,
EM: 515-540 / EM: 615-645 • 59001v2

DAPI/Orange FISH dual band 3 filters
EX: 380-405 / 530-560, DM 430-495 / 570-615,
EM: 445-475 / 570-610 • 59002v2

DAPI/Red FISH dual band 3 filters
EX: 380-405 / EX: 565-590, DM 445-475 / 605-650
EM: 445-475 / EM: 605-645 • 59003v2

Green/Red #1 FISH dual band 3 filters
EX: 480-500 / EX: 574-594, DM 424-462 / 510-560 / 610-660,
EM: 515-540 / EM: 615-640 • 59010

Green/Orange #1 FISH dualband 3 filters
EX: 465-490 / EX: 550-570, DM 425-455 / 505-535 / 590-625,
EM: 425-455 / EM: 505-535) EM: 590-620 • 59011

Green/Orange #2 FISH dualband 3 filters
EX: 460-485 / EX: 540-560, DM 500-530 / 575-620,
EM: 500-530 / EM: 575-620 • 59012

Aqua/Gold FISH dualband 3 filters
EX: 430-445 / EX: 525-545, DM 465-495 / 565-595,
EM: 470-490 / EM: 570-590 • 59033

OPTIMIZED FISH TRIPLE BAND FILTERS

ECFP/EYFP/mCherry triple band 3 filters
EM: 430-445 / EM: 495-510 / EM: 565-585,
DM 455-480 / 520-550 / 600-660,
EM: 460-480 / EM: 520-550 / EM: 605-660 • 69008

DAPI/Green/Orange #1 FISH triple band 3 filters
EX: 380-405 / EX: 465-490 / EX: 550-570,
DM 425-450 / 505-535 / 590-625
EM: 425-450 / EM: 505-535 / EM: 590-620 • 69013v2

DAPI/Green/Red FISH triple band 3 filters
EX: 380-405 / EX: 480-495 / EX: 575-590
DM 425-460 / 515-560 / 610-655
EM: 425-460 / EM: 515-560 / EM: 610-655 • 69015

Aqua/Green/Orange FISH triple band 3 filters
EX: 425-445 / EX: 490-505 / EM: 550- 560
DM 460-475 / 520-540 / 590-630
EM: 460-475 / EM: 520-540 / EM: 595-625 • 69011

DAPI/Aqua/Green/Orange FISH triple band 3 filters
EX: 380-390 / EX: 420-440 / EX: 555-575
DM 455-475 / 518-540 / 590-628
EM: 460-475 / EM: 518-540 / EM: 595-630 • 69014

NEUTRAL DENSITY FILTERS:

25 mm diameter, 1 mm thick and unmounted

AE.3250.ND01 Neutral density filter, ND 0.10 (T 80 %)

32 mm diameter, 1 mm thick and unmounted

AE.3252.ND01 Neutral density filter,ND 0.10 (T80 %)
AE.3252.ND02 Neutral density filter, ND 0.20 (T 65 %)
AE.3252.ND03 Neutral density filter, ND 0.30 (T 50 %)
AE.3252.ND04 Neutral density filter, ND 0.40 (T 40 %)
AE.3252.ND05 Neutral density filter, ND 0.50 (T 32 %)
AE.3252.ND06 Neutral density filter, ND 0.60 (T 25 %
AE.3252.ND10 Neutral density filter, ND 1.0 (T 10 %)
AE.3252.ND13 Neutral density filter, ND 1.3 (T 5 %)

On request, microscopes can be equipped with more specific, optimized and application related fluorescence filter sets

UltraZoom

FEATURED



UltraZoom

Discover the new UltraZoom (fluorescence) stereo microscopes for life science, page 210

stereo microscopes

Euromex stereo microscopes enable you to examine and analyze your specimens in both two and three dimensions. Combined with LED illumination the high-performance digital cameras and easy-to-use ImageFocus software provide perfect solutions for precise analysis and documentation

life science

stereo microscopes



product information

STEREOBLUE • 196
NEXIUSZOOM • 200
ULTRAZOOM • 210
DZ SERIES • 214
Z SERIES • 220

STEREO MICROSCOPES



StereoBlue

These stereo (zoom) microscopes are especially developed for laboratory applications, education and are greatly appreciated by biologists, entomologists and geologists

Equipped with either a parfocal zoom system with 1:6.4 zoom ratio or a double magnification revolver - both with LED illumination - the StereoBlue range guarantees crisp, high resolution images

● *SB.1903*

product information



SB.1903	330 (h) x 220 (w) x 266 mm (d) | 4.4 kg
SB.1903-P	299 (h) x 220 (w) x 266 mm (d) | 5.1 kg
SB.1302/SB.1402	340 (h) x 220 (w) x 266 mm (d) | 4.0 kg
SB.1302-P/SB.1402-P	299 (h) x 220 (w) x 266 mm (d) | 4.7 kg

HIGHLIGHTS

- **Designed for professional use**
- **Robust and sturdy**
- **WF 10x/21 mm eyepieces**
- **Dual magnification or zoom models**
- **Available in ergonomic rack & pinion, pillar, universal and boom stands**
- **Double 3 W LED illumination**
- **Also available with batteries**
- **Ergonomic carrying grip**
- **5 Years warranty**



● *SB.1402-P*

SPECIFICATIONS

EYEPIECES

Pair of WF 10x/21 mm secured eyepieces supplied with eyecups

HEAD

- Binocular or trinocular 45° inclined tubes
- Diopter adjustment on both eyepieces, except the models SB.1302-P/1402-P and SB.1302 /1402 , which have diopter adjustment on one side
- Interpupillary distance adjustable between 55 mm and 75 mm
- Trinocular head is supplied with a fixed light path beam splitter (50:50)

All optics are anti-fungus treated and anti-reflection coated for maximum light throughput

DUAL MAGNIFICATION OBJECTIVES

- Nosepiece with dual 1x/3x or 2x/4x revolving objectives
- Magnifications 10x/30x or 20x/40x
- Field of view 21 mm/6.9 mm or 10.5 mm/5.25 mm
- Working distance 100 mm

ZOOM OBJECTIVE

- Zoom stereo 0.7x to 4.5x parfocal objective
- Magnification from 7x to 45x
- Field of view 29.9 mm to 4.6 mm
- Working distance 100 mm



Built-in ringlight with 30 intensity adjustable LED's

EVO ZOOM OBJECTIVE

- Zoom stereo 0.5x to 5.5x parfocal objective
- Magnification from 5x to 55x
- Field of view 38 mm to 3.9 mm
- Working distance 100 mm

STAND

- The rack & pinion and pillar stands of the StereoBlue are equipped with ergonomic flat bases, complete with two object clamps and Ø 60 mm transparent and black/white stage plates The coarse adjustment is equipped with tension control
- The ergonomic universal (single arm stand, U) and boom stand (dual arm, B) are ideal for viewing large samples or working under the microscope. They come without illumination

- The U- and B-stand can be equipped with ring illuminators LE.1974 and LE.1973 with respectively 72 or 144 power LEDs controlled in segments, ideal for creating or lifting shades
- The stands are alloy metal casted with hardened coating

More illumination options see chapter 9 (Accessories)

ILLUMINATION

3 W transmitted and incident LED illuminators which can be used simultaneously. Model SB.3903 and SB.3903-P are equipped with 3 W transmitted and incident LED illuminators and a built-in 30 LED ringlight incident illuminator. The light intensities can be adjusted separately. Also available with batteries (add "B" after article number, e.g. SB.1302-PB)

ANTI-THEFT SLOT

At the back of the microscope a Kensington Security slot is placed, which can be used to secure the instrument from theft (not on the U- and B-models)

PACKAGE CONTENT

Models with illumination are supplied with power cord, dust cover, eyecups, a spare fuse, Ø 60 mm transparent, black/white stage plates and user manual. All packed in a polystyrene box

STEREOBLUE 1X/3X AND 2X/4X OBJECTIVES

MODELS	Binocular	1x/3x objective	2x/4x objective	Rack & pinion stand 3 W LED	Pillar stand 3 W LED	Weight (kg)
SB.1302	•	•		•		3.3
SB.1302-P	•	•			•	4.2
SB.1402	•		•	•		3.3
SB.1402-P	•		•		•	4.2

STEREOBLUE 0.7X UP TO 4.5X ZOOM/0.5X UP TO 5.5X ZOOM EVO

MODELS	Bino	Trino	0.7 - 4.5x zoom	0.5 - 5.5x zoom EVO	Rack & pinion stand 3 W LED	Pillar stand 3 W LED	Universal stand	Boom stand on heavy base plate	30 LED right light	Weight (kg)
SB.1902	•		•		•					3.6
SB.1902-P	•		•			•				4.4
SB.1902-U	•		•				•			15.4
SB.1902-B	•		•					•		21.9
SB.1903		•	•		•					3.7
SB.1903-P		•	•			•				4.5
SB.1903-U		•	•				•			15.5
SB.1903-B		•	•					•		22.0
SB.3903		•	•		•				•	3.7
SB.3903-P		•	•			•			•	4.5
SB.1702	•			•	•					3.6
SB.1702-P	•			•		•				4.4
SB.1702-U	•			•			•			15.4
SB.1702-B	•			•				•		21.9
SB.1703		•		•	•					3.7
SB.1703-P		•		•		•				4.5
SB.1703-U		•		•			•			15.5
SB.1703-B		•		•				•		22.0

ACCESSORIES AND SPARE PARTS

EYEPIECES

SB.6210 Pair of HWF 10x/21 mm eyepieces
SB.6210-C WF 10X/21 mm eyepiece with crosshairs
SB.6210-M WF 10X/21 mm eyepiece with micrometer scale
SB.6015 Pair of HWF 15x/15 mm eyepieces
SB.6015-C WF 15X/15 mm eyepiece with crosshairs
SB.6015-M WF 15X/15 mm eyepiece with micrometer scale
SB.6020 Pair of HWF 20x/10 mm eyepieces
SB.6020-C WF 20/10 mm eyepiece with crosshairs
SB.6020-M WF 20/10 mm eyepiece with micrometer scale
SB.6099 Pair of eyecups

AUXILIARY LENSES

SB.8903 Auxiliary 0.3x lens for zoom models, WD 247 mm. Only suitable for boom and articulated stands
SB.8905 Auxiliary 0.5x lens for zoom models, WD 169 mm. Not suitable for SB.1X02, -1X03, -3903 and -3903-P
SB.8907 Auxiliary 0.75x lens for zoom models, WD 105 mm
SB.8915 Auxiliary 1.5x lens for zoom models, WD 48 mm. Not suitable for SB.39xx

POLARIZATION ATTACHMENT

SB.9520 Polarization kit: 360° rotatable circular stage with built-in polarization filter (SB.9524) + analyzer in mount to be screwed under the head (SB.9525)
SB.9524 360° rotatable circular stage with built-in polarization filter
SB.9525 360° rotatable analyzer in mount to be screwed under the head

MISCELLANEOUS

SB.8950 Protection glass window
SB.9020 Universal single-arm stand without head holder and without illumination
SB.9030 Universal double-arm stand without head holder and without illumination
SB.9090 Head holder for SB.9020
SB.9045 Fall protection ring for StereoBlue pillars. Note: the one- and double arm stands are as a standard supplied with this ring
SB.9570 Pair of object clamps for stage
SB.9952 Stage plate transparent, Ø 60 mm
SB.9956 Stage plate black/white, Ø 60 mm
SB.9983-R 3 W LED replacement unit, incident illumination
SB.9983 3 W LED replacement unit, transmitted illumination
AE.1112 Micrometer 76 x 26 mm slide, 50 mm/50 divisions

CAMERA ACCESSORIES

SB.9850 C-mount adapter with 0.5x lens for 1/2" cameras. Only for trinocular models
AE.5130 Universal SLR camera adapter with 2x projection lens for 23.2 mm tubes. Needs T2 adapter
AE.5025 T2 adapter for Nikon D digital SLR cameras
AE.5040 T2 adapter for Canon EOS digital SLR cameras

Other T2 adapters on request

DISPOSABLES

PB.5245 Lens cleaning paper, 100 sheets per pack
PB.5274 Isopropyl alcohol 99% (200 ml)
PB.5275 Cleaning kit: lens cleaning fluid, lint free lens tissues, brush, air blower, cotton swabs

euromex.academy

DIMENSIONS

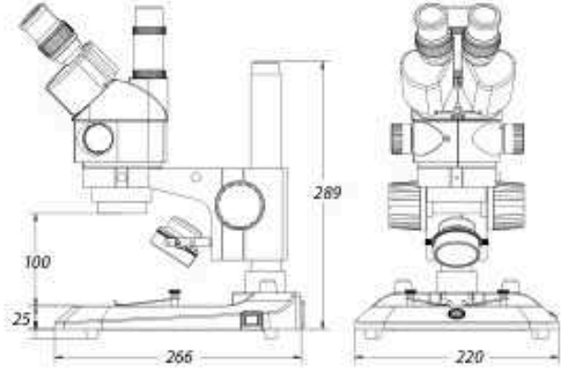



STEREO MICROSCOPES

NexiusZoom (EVO)

The NexiusZoom and NexiusZoom EVO stereo microscopes allow three-dimensional observation of your specimen, suitable for highly demanding applications. These top level zoom microscopes are perfect for analyzing all kinds of material surfaces or for observing and preparing biological samples

These stereo microscopes are supplied with a large choice of stands, with or without LED illumination. Ideal for a wide variety of applications. With additional lenses and objectives magnifications from 3.3x up to 220x can be achieved



● *NZ.1903-S*

product information

NZ.1903-S / NZ.1703-S
(289 (h) x 256 (w) x 311 mm (d) | 5.1 kg)
NZ.1903-P / NZ.1703-P
289 (h) x 256 (w) x 311 mm (d)) 5.2 kg
For weight of other products see table

HIGHLIGHTS

- **Binocular and trinocular heads with HWF 10x/22 mm or HWF 10x/23 mm eyepieces**
- **Zoom ratio 1 : 6.7, 6.7x to 45x or 1 : 8.4, 6.5x to 55x**
- **Click-stops standard on EVO models**
- **Ergonomic stands**
- **Double 3 W LED illuminations**
- **Configurations up to 220x magnification**
- **Large working distance (WD)**
- **10 Years warranty**



● *NZ.1903-PG*

● *NZ.1903-M*

SPECIFICATIONS

EYEPIECES

The standard NexiusZoom is supplied with a pair of HWF 10x/22 mm eyepieces. The NexiusZoom EVO is supplied with a pair of HWF 10x/23 mm eyepieces

HEAD

Binocular or trinocular heads with 45° inclined tubes. Both eyepieces have ± 5 diopter adjustments. Interpupillary distance adjustable between 54 mm and 75 mm. Trinocular head is supplied with a fixed light path beam splitter (50:50). The NexiusZoom EVO models are now equipped with click-stops

OBJECTIVES

The standard NexiusZoom is supplied with a 1:6.7 zoom objective with 0.67x to 4.5x magnifications, a field of view from 33 mm to 4.9 mm. Working distance 110 mm

The NexiusZoom EVO is supplied with a 1:8.4 zoom objective with 0.65x to 5.5x magnifications, a field of view from 35.4 mm to 4.2 mm. WD 110 mm

All optics are anti-fungus treated and anti-reflection coated for maximum light throughput

AUXILIARY LENSES

For extra working distances the following auxiliary lenses are available for both the standard NexiusZoom and NexiusZoom EVO: 0.3x, 0.4x, 0.5x, 0.75x, 1.5x and 2.0x. For fields of view and working distances, see table magnifications



● *NexiusZoom EVO NZ.5313*

POLARIZATION

The NexiusZoom and NexiusZoom EVO can be supplied with an optional 360° rotatable circular stage with built-in polarization filter and/or an optional rotatable analyzer filter in mount to be screwed under the objective

STANDS

- Ergonomic pillar or rack & pinion stand with 3 W incident and 3 W transmitted LED illuminations (-P and -S stands)
- Ergonomic pillar stand with two 3 W goose-neck type incident LED illuminations on each side and a 3 W transmitted LED illumination (-PG stand)
- Ergonomic pillar stand with rotating mirror and 3 W LED transmitted and incident illuminations (-M stand)
- Ergonomic universal or boom stands, without illumination (-U and -B stands)
- Articulated arm stand for table mounting or with heavy desktop base plate, both without head holder, without illumination (-A and -AP stands)
- Lightweight articulated arm stand, with head holder, without illumination (NZ.9047)

All pillar and rack & pinion stands are supplied with two object clamps. Alloy metal cast, hardened coating

STAGE

180 x 155mm mechanical X-Y stage with 76 x 55mm translation stage and transparent glass plate for NexiusZoom, fixed on stage of microscope. Only available with new microscopes - due to fixing - so it has to be ordered with the purchase of a microscope (see accessories)

ILLUMINATION

3 W transmitted and incident LED illuminators with internal power supply 100-240 V. Both illuminators can be used simultaneously and the light intensities can be adjusted separately. The universal single or double arm stands and the articulated stands can be equipped with the ring illuminators LE.1974 and LE.1973 with respectively 72 or 144 power LEDs controlled in segments or with the LE.5212 illumination station, ideal for creating or lifting shades

ANTI-THEFT SLOT

At the back of the microscope a Kensington Security slot is placed, which can be used to secure the instrument from theft (only on th P-, PG- and S-models)

PACKAGE CONTENT

Supplied with power cord, a pair of eyecups, dust cover, a spare fuse and user manual. All packed in a polystyrene box



● *NZ.1902-S*



● *NZ.1902-P*

MAGNIFICATIONS

NexiusZoom: working distance and field of view with standard HWF 10x / 22 high wide field eyepieces

Zoom indication	Auxiliary lens 0.3x WD 287 mm		Auxiliary lens 0.4x WD 220 mm		Auxiliary lens 0.5x WD 183 mm		Auxiliary lens 0.75x WD 105 mm		Without auxiliary lens WD 110 mm		Auxiliary lens 1.5x WD 53 mm		Auxiliary lens 2x WD 34 mm	
	Total mag.	FOV in mm	Total mag.	FOV in mm	Total mag.	FOV in mm	Total mag.	FOV in mm	Total mag.	FOV in mm	Total mag.	FOV in mm	Total mag.	FOV in mm
0.67	2.0	109.5	2.7	82.1	3.35	65.7	5.0	43.8	6.7	32.8	10.1	21.9	13.4	16.4
0.7	2.1	104.8	2.8	78.6	3.5	62.9	5.3	41.9	7.0	31.4	10.5	21.0	14.0	15.7
0.8	2.4	91.7	3.2	68.8	4.0	55.0	6.0	36.7	8.0	27.5	12.0	18.3	16.0	13.8
1.0	3.0	73.3	4.0	55.0	5.0	44.0	7.5	29.3	10.0	22.0	15.0	14.7	20.0	11.0
1.5	4.5	48.9	6.0	36.7	7.5	29.3	11.3	19.6	15.0	14.7	22.5	9.8	30.0	7.3
2.0	6.0	36.7	8.0	27.5	10.0	22.0	15.0	14.7	20.0	11.0	30.0	7.3	40.0	5.5
3.0	9.0	24.4	12.0	18.3	15.0	14.7	22.5	9.8	30.0	7.3	45.0	4.9	60.0	3.7
4.0	12.0	18.3	16.0	13.8	20.0	11.0	30.0	7.3	40.0	5.5	60.0	3.7	80.0	2.8
4.5	13.5	16.3	18.0	12.2	22.5	9.8	33.8	6.5	45.0	4.9	67.5	3.3	90.0	2.4

NexiusZoom EVO: working distance and field of view with standard HWF 10x / 23 high wide field eyepieces

Zoom indication	Auxiliary lens 0.3x WD 287 mm		Auxiliary lens 0.4x WD 220 mm		Auxiliary lens 0.5x WD 183 mm		Auxiliary lens 0. 75x WD 105 mm		Without auxiliary lens WD 110 mm		Auxiliary lens 1.5x WD 53 mm		Auxiliary lens 2x WD 34 mm	
	Total mag.	FOV in mm	Total mag.	FOV in mm	Total mag.	FOV in mm	Total mag.	FOV in mm	Total mag.	FOV in mm	Total mag.	FOV in mm	Total mag.	FOV in mm
0.65	1.95	117.9	2.6	88.5	3.25	70.8	4.9	47.2	6.5	35.4	9.8	23.6	13.0	17.7
1.0	3.0	76.7	4.0	57.5	5.0	46.0	7.5	30.7	10.0	23.0	15.0	15.3	20.0	11.5
1.5	4.5	51.1	6.0	38.3	7.5	30.7	11.3	20.4	15.0	15.3	22.5	10.2	30.0	7.7
2.0	6.0	38.3	8.0	28.8	10.0	23.0	15.0	15.3	20.0	11.5	30.0	7.7	40.0	5.8
2.5	7.5	30.7	10.0	23.0	12.5	18.4	18.8	12.3	25.0	9.2	37.5	6.1	50.0	4.6
3.0	9.0	25.6	12.0	19.2	15.0	15.3	22.5	10.2	30.0	7.7	45.0	5.1	60.0	3.8
3.5	10.5	21.9	14.0	16.4	17.5	13.1	26.3	8.8	35.0	6.6	52.5	4.4	70.0	3.3
4.0	12.0	19.2	16.0	14.4	20.0	11.5	30.0	7.7	40.0	5.8	60.0	3.8	80.0	2.9
4.5	13.5	17.0	18.0	12.8	22.5	10.2	33.8	6.8	45.0	5.1	67.5	3.4	90.0	2.6
5.0	15.0	15.3	20.0	11.5	25.0	9.2	37.5	6.1	50.0	4.6	75.0	3.1	100.0	2.3
5.5	16.5	13.9	22.0	10.5	27.5	8.4	41.3	5.6	55.0	4.2	82.5	2.8	110.0	2.1

WD = working distance, FoV = Field of view, Total mag. = total magnification

DIMENSIONS

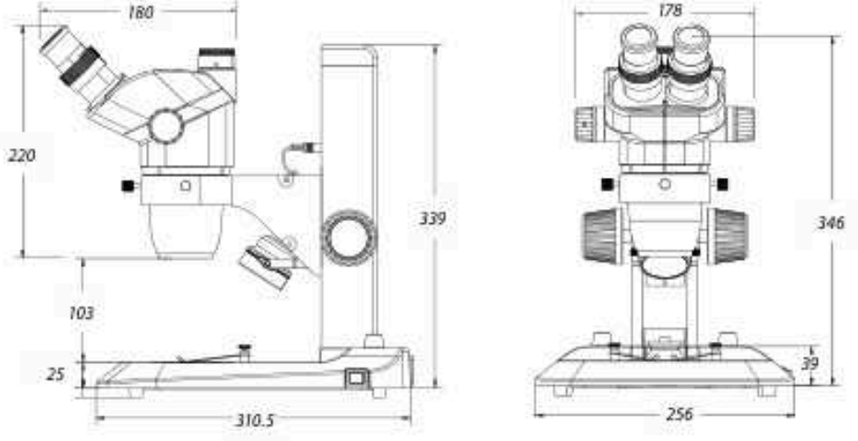



NZ.1902-U

NZ.1903-B

NZ.9047



NZ.1903-AP

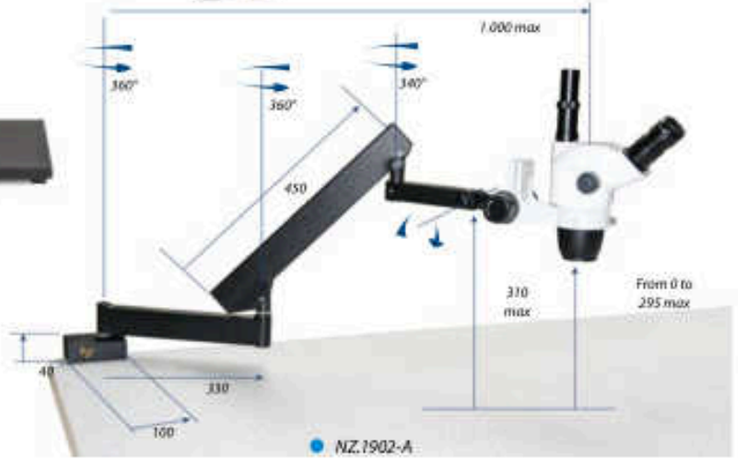

NZ.1902-A

NEXIUSZOOM 0.67-4.5 (WF 10X/22MM)

MODELS	Bino	Trino	Pillar stand	Rack & pinion stand	Universal stand	Boom stand on heavy base plate	Articulated arm stand on table clamp	Articulated arm stand on heavy base plate	Gooseneck dual LED	Mirror LED	Weight (kg)
NZ.1902-P	•		•								5.0
NZ.1902-PG	•		•						•		5.1
NZ.1902-S	•			•							4.9
NZ.1902-U	•				•						15.6
NZ.1902-B	•					•					22.1
NZ.1902-A	•						•				8.6
NZ.1902-AP	•							•			20.7
NZ.1903-P		•	•								5.2
NZ.1903-PG		•	•						•		5.3
NZ.1903-M		•	•							•	5.1
NZ.1903-S		•		•							5.1
NZ.1903-U		•			•						15.7
NZ.1903-B		•				•					22.2
NZ.1903-A		•					•				8.7
NZ.1903-AP	•							•			20.8

NEXIUSZOOM EVO 0.65-5.5 (WF 10X/23MM)

MODELS	Bino	Trino	Pillar stand	Rack & pinion stand	Universal stand	Boom stand on heavy base plate	Articulated arm stand on table clamp	Articulated arm stand on heavy base plate	Gooseneck dual LED	Mirror LED	Weight (kg)
NZ.1702-P	•		•								5.0
NZ.1702-PG	•		•						•		5.1
NZ.1702-M	•		•							•	4.9
NZ.1702-S	•			•							4.9
NZ.1702-U	•				•						15.6
NZ.1702-B	•					•					22.1
NZ.1702-A	•						•				8.6
NZ.1702-AP	•							•			20.7
NZ.1703-P		•	•								5.2
NZ.1703-PG		•	•						•		5.3
NZ.1703-M		•	•							•	5.1
NZ.1703-S		•		•							5.1
NZ.1703-U		•			•						15.7
NZ.1703-B		•				•					22.2
NZ.1703-A		•					•				8.7
NZ.1703-AP		•						•			20.8

The NexiusZoom EVO models are now equipped with click-stops

ACCESSORIES AND SPARE PARTS

HEADS & EYEPIECES

NZ.5302 NZ binocular head 0.67-4.5x*
NZ.5303 NZ trinocular head 0.67-4.5x*
NZ.5312 NZ EVO binocular head 0.65-5.5x*
NZ.5313 NZ EVO trinocular head 0.65-5.5x*
** without head holder*

NZ.6010 Pair of HWF 10x/22 mm eyepieces
NZ.6010-C HWF 10x/22 mm eyepiece only with crosshairs
NZ.6010-CM HWF 10/22 mm eyepiece only with 10/100 micrometer and crosshairs
NZ.6015 Pair of HWF 15x/16 mm eyepieces for NZ
NZ.6020 Pair of HWF 20x/12 mm eyepieces for NZ
NZ.6099 Pair of eyecups for NZ
NZ.6210 Pair of HWF 10x/23 mm eyepieces for NZ EVO
NZ.6210-C HWF 10x/23 mm eyepiece only with crosshairs for NZ EVO
NZ.6210-CM HWF 10x/23 mm eyepiece only with 10/100 micrometer and crosshairs for NZ EVO
NZ.6020-CM HWF 20x/12 mm eyepieces with 10/100 micrometer and crosshairs

AUXILIARY LENSES

NZ.8903 Additional 0.3x lens for NZ. WD 287 mm. Only suitable for A, AP, U, B and BC stands
NZ.8904 Additional 0.4x lens for NZ. WD 220 mm. Only suitable for A, AP, U, B and BC stands
NZ.8905 Additional 0.5x lens for NZ. WD 183 mm. Not suitable for S stands
NZ.8907 Additional 0.75x lens for NZ. WD 105 mm
NZ.8915 Additional 1.5x lens for NZ. WD 53 mm
NZ.8920 Additional 2.0 lens for NZ. WD 34 mm. Not suitable for S stands

STANDS

NZ.9000 Ergo pillar stand without illumination. Height 35 cm
NZ.9005 Ergo pillar stand with adjustable transmitted 3 W LED illumination. Height 35 cm
NZ.9010 Ergo rack & pinion stand with incident and transmitted 3 W LED illuminators
NZ.9015 Ergo pillar stand with incident and transmitted 3 W LED illuminators
NZ.9018 Ergonomic pillar stand with two 3 W gooseneck type incident LED illuminations on each side and a 3 W transmitted LED illumination
NZ.9020 Universal one-arm stand without NZ head holder
NZ.9025 Black universal stand with table clamp without NZ head holder
NZ.9027 Black universal stand with heavy baseplate without NZ head holder
NZ.9030 Universal double-arm boom stand without NZ head holder
NZ.9032 Universal two-arm stand with table clamp without NZ head holder
NZ.9042 Stand with rotating mirror and indirect transmitted LED illumination
NZ.9047 Lightweight articulated arm stand, with head holder, without illumination



● *NZ.9005* ● *NZ.9000*



● *NZ.8903* ● *NZ.8904* ● *NZ.8905* ● *NZ.8907* ● *NZ.8915* ● *NZ.8920*

HEAD HOLDERS

NZ.9081 Head 76 mm holder for NexiusZoom head on articulated arm stand NZ.9025 and NZ.9027
NZ.9090 Head holder, suitable for NZ.9000/9005/9015/9017/9020/9030 stands
NZ.9095 Head holder with fine and coarse adjustment. For NZ.9000/9005/9015/9018/9020/9030/9032 and NZ.9042 stands



● *NZ.9095*

ILLUMINATION

LE.5207 Multi-functional dual 3 W LED adjustable light source. Equipped with two flexible gooseneck arms with LED illuminator
LE.5212 Euromex illumination station with two independently controlled goosenecks, a ringlight and a transmitted stage illuminator (see photos on next page)
LE.5260 Interchangeable high power (standard) white 6500K light guide for NZ.9018 / LE.5207 / LE.5212, 1 piece
LE.5261 Interchangeable high power 365 nm flexible arm for NZ.9018/LE.5207/LE.5212, 1 piece
LE.5262 Interchangeable high power 395 nm flexible arm for NZ.9018/LE.5207/LE.5212, 1 piece
LE.5263 Interchangeable high power 420 nm flexible are for NZ.9018/LE.5207/LE.5212, 1 piece
LE.1974 Ring illuminator with 72 LEDs with adjustable light intensity. External power supply 110-240 Vac / 12 Vdc (50/60 Hz). With segment controller. Brightness of 20,000 Lux at 100 mm distance and color temperature of 6,500 K. Mounting for stereo head with diameter from 25 to 61 mm
LE.1973 Ring illuminator with 144 LEDs with adjustable light intensity. External power supply 100-240 Vac / 12 Vdc (50/60 Hz). With segment controller. Brightness of 23,000 Lux at 100 mm distance and color temperature of 6,500 K. Mounting for stereo head with diameter from 25 to 61 mm
LE.5210 Euromex cold light illuminator EK-1, 100 W. 110V and 230V models available
LE.5211 Euromex cold light illuminator, 150 W halogen. 110 V and 230 V models available
LE.5211-LED Euromex cold light illuminator LED, 30W high power LED
LE.5214 Dual arm light conductor, gooseneck self-sustaining, 50 cm long, 4 mm diameter core
LE.5215 Triple arm light conductor, gooseneck elf-sustaining, 50 cm long, 4 mm diameter core
LE.5222 Focusing head suitable for focusing lens LE.5214 and LE.5215. Needs LE.5224
LE.5224 Aspherical focusing lens for mounting in LE.5222

More illumination options, see chapter 9

STAGES

NZ.9505 Mechanical 180 x 155 mm X-Y stage with 75 x 55 mm translation and transparent glass plate
NZ.9524 360° rotatable circular stage with built-in polarization filter for NZ
NZ.9525 360° rotatable analyzer in mount to be screwed under head of NZ
AE.5168-NZ Heating stage for NZ microscope stage

CAMERA ACCESSORIES

NZ.9850 C-mount adapter with 0.5x lens for 1/2 inch cameras
AE.5130 Universal SLR adapter with built-in 2x lens for standard 23.2 mm tube. Needs T2 adapter
AE.5025 T2 adapter for Nikon D SLR digital camera
AE.5040 T2 adapter for Canon EOS SLR digital camera

MISCELLANEOUS

NZ.8950	Protection glass window for NZ
NZ.9520	Polarization kit for NZ: 360° rotatable circular stage with built-in polarization filter (NZ.9524) + analyzer in mount to be screwed under head (NZ.9525)
NZ.9040	Darkfield attachment for NZ
NZ.9045	Fall protection ring for NexiusZoom pillars. Note: the one- and double arm stands are as a standard supplied with this ring
NZ.9570	Pair of object clamps for standard stage
NZ.9572	Adjustable GEM object clamp for P, PL and S stand of NZ
NZ.9950	Standard plexiglass object plate, opaque, with black border
NZ.9956	Pair of object stage plates (black/white) Ø 90 mm
NZ.9958	Standard glass object plate, opaque
NZ.9983-R	3 W LED replacement unit for NZ, incident illumination
NZ.9983	3 W LED replacement unit for NZ, transmitted illumination
AE.1112	Micrometer 76 x 26 mm slide, 50 mm/500 divisions, 100 µm per division
NZ.4300	Aluminium case for NexiusZoom microscopes with -P/-S/-PG stands

DISPOSABLES

PB.5245	Lens cleaning paper, 100 sheets per pack
PB.5274	Isopropyl alcohol 99%, 200 ml
PB.5275	Cleaning kit: lens fluid, lint free lens tissues/ paper, brush, air blower, cotton swabs
PB.5276	Microscope maintenance and servicing kit, 16 pieces: cleaning brush, screwdriver set of 6, air blower, 3 Allen keys, 1.5, 2, 2.5 mm, lens cleaning fluid 20 ml, cleaning cloth 140 x 140 mm, 100 lens tissue sheets, tube of maintenance grease, 10 ml bottle of oil, packed in a nice toolbox

NZ = NexiusZoom

WD = working distance



- *NZ.9505*





- *The LE.5212 in two different configurations*

euromex.academy

QUICK INSTALLATION

how to set up a **stereo microscope**

Setting up your stereo microscope properly is essential to getting parfocal images during the entire zoom range. It also prevents head aches, stressful eyes and fatigue. Below you will find a setup guide that will help get the best out of your microscope

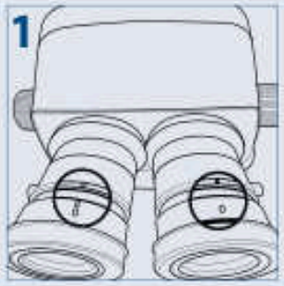

Turn the diopter adjustment rings of both eyepieces to position 0°



Put a specimen on the stage plate



Turn the zoom adjustment knob to the lowest magnification



Rotate the focus adjustment knob to bring the specimen into focus



Turn the zoom adjustment knob to the highest magnification



Rotate the focus adjustment knob to bring the specimen into focus



Turn the zoom adjustment knob to the lowest magnification



Rotate the diopter adjustment rings of the left and right eyepiece to bring the specimen into focus

PLEASE NOTE

Put the zoom adjustment knob at the highest magnification again and check the image focusing. The diopter adjustment is complete when the image is accurately focused during zooming

If not, please repeat steps 3 to 8



UltraZoom

High-end zoom microscope

The Euromex UltraZoom series combines ergonomic design, advanced optics and flexibility, making it an indispensable tool for researchers and industrial professionals alike. Experience unmatched precision and comfort with this innovative industrial zoom microscope



● *UZ.1803*

Oblique Contrast Illumination

The Oblique Contrast Illumination (OCI) feature on a stereo microscope is a must for unstained, highly transparent specimen. By directing light at an angle, oblique illumination accentuates edges and fine details that are otherwise hard to see under standard brightfield. Shadows created by angled lighting give structures a sense of depth, making it easier to interpret the topology and shape of specimens like cells or tissues

product information



● *Oblique Contrast Illumination*



UZ.1803	369 (h) x 299 (w) x 365 mm (d) | 12.6 kg
UZ.1808	369 (h) x 299 (w) x 365 mm (d) | 12.8 kg

HIGHLIGHTS

- **Ergonomic tilting head from 0 to 30°**
- **Binocular 20° head**
- **Swiveling eyepiece tubes for two heights**
- **EWF 10x/23 mm eyepieces**
- **Plan-apo lens for superb imaging**
- **Fine and coarse focus controls**
- **Zoom Ratio: 1:18**
- **Magnification 7.5 to 135x**
- **Oblique Contrast Illumination**
- **Transmitted 8 W LED illumination**
- **Fluorescence attachment available**
- **10 years warranty**



● *Ergo head (UZ.1808)*

SPECIFICATIONS

EYEPIECES

Pair of EWF 10x/23 mm eyepieces

HEAD

- Ergonomic 0-30° tilting head or binocular 20° head
- Diopter ± 5 adjustment on both eyepieces and interpupillary distance from 55 to 75 mm
- Both heads have a photo port with 1x c-mount for 1" cameras

CENTRAL ZOOM UNIT

Zoom ratio 1:18 for total magnifications from 0.75 to 13.5x

COMMON MAIN OBJECTIVE

As a standard supplied with a 1x plan apochromatic Common Main Objective, working distance 60 mm

The objective has an anti-reflection coating for maximum light throughput and is anti-fungus treated

STAND

- Large ergonomic stand with 180 mm object plate
- Oblique Contrast Illumination slider
- Coaxial coarse and fine adjustment
- Internal 100-240 Vac power supply

ILLUMINATION

Supplied with 8 W NeoLED™ transmitted and *Oblique Contrast Illumination* built-in 100-240 V power supply

MAGNIFICATIONS

Objective with 60 mm working distance, standard outfit

Zoom indication	Total magnification	Field of view
0.75x	7.5x	3.07
1.0x	10x	2.3
2.0x	20x	1.15
3.0x	30x	0.77
6.0x	60x	0.38
10.0x	100x	0.23
13.5x	135x	0.17

OBLIQUE CONTRAST ILLUMINATION

Oblique illumination enables the specimen to be illuminated from one side only (off-axis) by having the light source titled or directed from an oblique angle or from the side. Only diffracted light on a single side is admitted to the objective and, because of the obliquity of illumination, diffracted light on the other side misses the objective altogether. As a result, details in pseudo-relief from an otherwise almost invisible colorless specimen are than revealed

PACKAGE CONTENT

Supplied with power cord, dust cover, tools and user manual
All packed in sturdy box

FLUORESCENCE

UZ.9200-NF

Epi-fluorescence attachment

- With fiber light guide
- UV shield
- 4 LEDs for fluorescence light source
- Power supply
- Without filter sets and without filter blocks. Each installed filter set needs an empty block (UZ.9749). Each position without filter set needs to be filled up with a UV.9749-BF1 or UV.9750-BF2
- The attachment weighs 2 kg

● *UZ.1803 in combination with the Epi-fluorescence attachment UZ.9200-NF*



FLUORESCENCE ACCESSORIES

UZ.9745 Fluorescence filter set for Blue excitation
EX: 460-495 nm DM 505 EM: 510 nm (LP)

UZ.9746 Fluorescence filter set for Green excitation
EX: 510-550 nm DM 570 EM: 575 nm (LP)

UZ.9747 Fluorescence filter set for Violet excitation
EX: 400-410 nm DM 455 EM: 460 nm (LP)

UZ.9748 Fluorescence filter set for UV excitation
EX: 330-385 nm DM 410 EM: 420 nm (LP)

UZ.9750-FITC
Fluorescence filter set for FITC excitation
EX: 460-495 nm DM 505 EM: 510-550 nm (BP)

UZ.9750-TRITC
Fluorescence filter set for Green excitation
EX: 528-553 nm DM 565 EM: 578-633 nm (BP)

UZ.9749 Empty cube for fluorescence filter sets

UZ.9749-BF1
Empty cube for fluorescence filter sets

UZ.9749-BF2
Empty cube for fluorescence filter sets

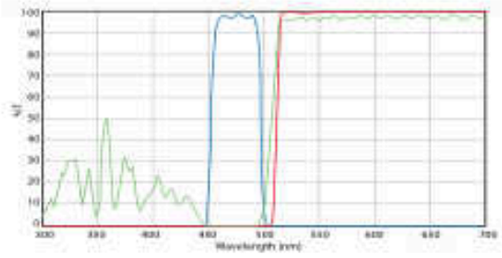

● *UZ.9745*

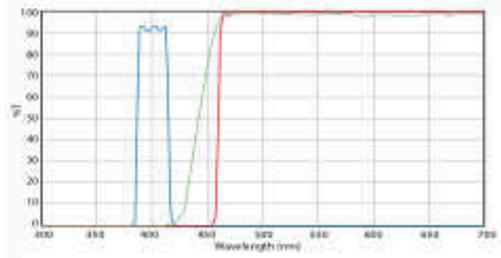

● *UZ.9747*

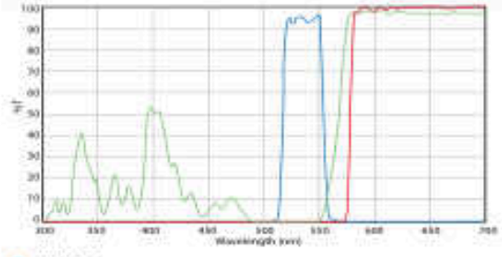

● *UZ.9746*

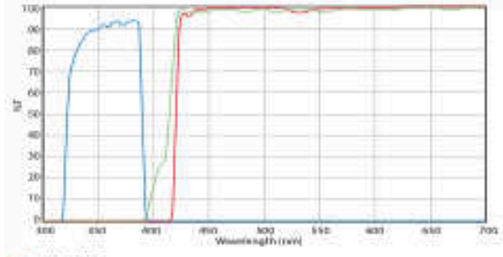

● *UZ.9748*

ACCESSORIES AND SPARE PARTS

UZ.6010 Eyepiece SWF 10x/23 mm (1 piece)
UZ.6010-C Eyepiece SWF 10x/23 mm (1 piece) with cross hair
UZ.6015 Eyepiece WF 15x/16 mm (1 piece)
UZ.6020 Eyepiece WF 15x/16 mm (1 piece)
LE.1979 LED ringlight

DIMENSIONS

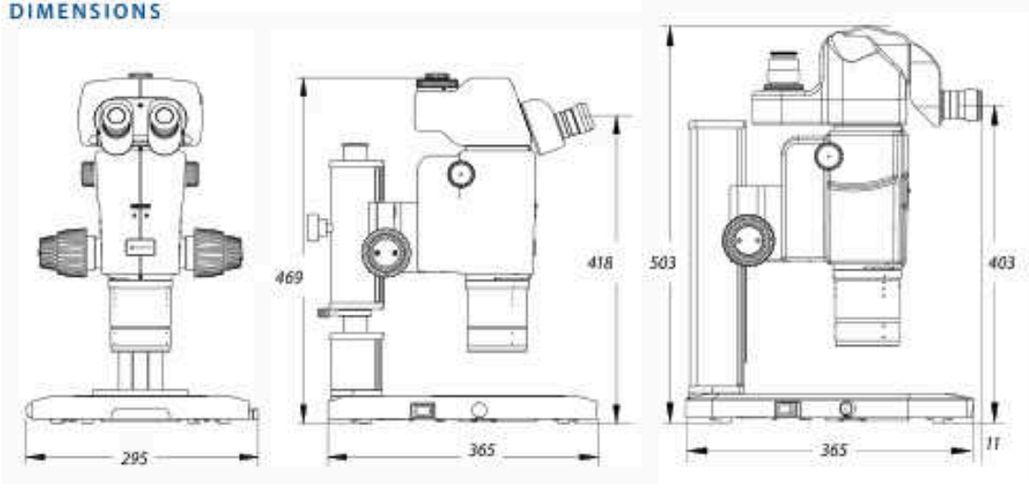

● *UZ.1803*

● *UZ.1808*



DZ series

DZ series

The modular stereo microscopes of the DZ series combine ergonomics with very high resolution optics. Either standard versions or customized models are available thanks to the large choice of central zoom units, eyepieces, stands and accessories

A fluorescence illumination unit enables scientific research such as for studies of vertebrate development and gene function, teratology, genetics and environmental sciences



- *Customized configuration model DZ.0800, 2x DZ.3010, DZ.2025, DZ.4010 and DZ.5040*

product information



DZ.1100 / DZ.1600 / DZ.1800
305 (h) x 330 (w) x 285 (d) mm | 6.0 kg
DZ.1105 / DZ.1605 / DZ.1805
444 (h) x 330 (w) x 285 (d) mm | 5.2 kg
For weight of other products see table 'Models'

HIGHLIGHTS

- **Binocular and trinocular models**
- **Six standard configurations or customized configuration**
- **Ergonomic tilting head from 0° to 35° tilting or fixed 20° inclined head, EWF 10x/22mm eyepieces,**
- **Three central zoom units from 4x to 320x**
- **Fields of view from 55 mm to 1.4 mm**
- **Working distances from 126 mm to 33 mm**
- **Ergonomic rack & pinion stands, universal stand or articulated arm stand**
- **Transmitted and incident LED illumination**
- **100 W Epi-fluorescence mercury vapor illuminator**
- **10 Years warranty**



- *Customized specification fluorescence model*

SPECIFICATIONS

EYEPIECES

Pair of EWF 10x/22 mm eyepieces

HEAD

- Ergonomic binocular 0-35° tilting head
- Binocular 20° tilted head
- Diopter ± 5 adjustment on both eyepieces
- Interpupillary distance from 55 to 75 mm
- Photo ports for one or two cameras
- Click-stops

CENTRAL ZOOM UNIT

Three central zoom units are available:

- 1:6.3 for total magnifications from 8 to 50x
- 1:8 for total magnifications from 8 to 64x
- 1:10 for total magnifications from 8 to 80x

COMMON MAIN OBJECTIVE

Standard configurations are supplied with a plan apochromatic common main objective (CMO) 1x, working distance 78 mm. Other plan apochromatic common main objectives 0.5x (WD 126 mm) and 2x (WD 33 mm) are also available

All optics have an anti-reflection coating for maximum light throughput and are anti-fungus treated

STAND

Large ergonomic stand with Ø 100 mm object plate and two object clamps. Coarse adjustment with adjustable friction. A universal stand and an articulated arm stand without illumination are also available for configurations built to customer's specifications

ILLUMINATION

The transmitted and incident 3 W LED illuminations are supplied with a built-in 100-240 V power supply. Both illuminators can be used simultaneously and the light intensities can be adjusted separately

PACKAGE CONTENT

Supplied with power cord, dust cover, a spare fuse and user manual. All packed in a polystyrene box

STANDARD CONFIGURATIONS

All six standard configurations are equipped with EWF 10x/22mm eyepieces, plan achromatic common main objective (CMO) 1x and rack & pinion stand with incident and transmitted LED illumination

DZ SERIES STANDARD

MODELS	Binocular 20° head	Binocular ergo 0 to 35° tilting	Magnifications from 8 to 50x	Magnifications from 8 to 64x	Magnifications from 8 to 80x
DZ.1100		•			•
DZ.1105	•				•
DZ.1800		•		•	
DZ.1805	•			•	
DZ.1600		•	•		
DZ.1605	•		•		

All equipped with EWF 10x/22mm eyepieces

MAGNIFICATIONS AND FIELDS OF VIEW FOR STANDARD CONFIGURATIONS

MODELS	Zoom indication	0.5x Objective WD 126 mm Total magnification	0.5x Objective WD 126 mm Field of view	1.0x Objective WD 78 mm Total magnification	1.0x Objective WD 78 mm Field of view	2.0x Objective WD 33 mm Total magnification	2.0x Objective WD 33 mm Field of view
DZ.1100 / DZ.1105	0.8x	4x	55	8x	27.5	16x	13.7
DZ.1800 / DZ.1805	1.0x	5x	44	10x	22	20x	11
DZ.1600 / DZ.1605	1.5x	7.5x	29.3	15x	14.6	30x	7.3
	2.0x	10x	22	20x	11	40x	5.5
	3.0x	15x	14.6	30x	7.3	60x	3.6
	4.0x	20x	11	40x	5.5	80x	2.7
	5.0x	25x	8.8	50x	4.4	100x	2.2
	6.0x	30x	7.3	60x	3.6	120x	1.8
	6.4x	32x	6.8	64x	3.4	128x	1.7
	7.0x	35x	6.3	70x	3.1	140x	1.5
	8.0x	40x	5.5	80x	2.75	160x	1.4

DIMENSIONS

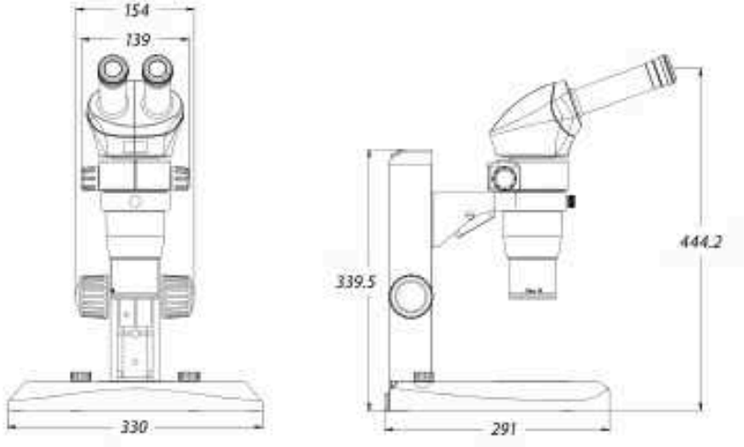

BUILD YOUR OWN STEREO MICROSCOPE

A customized DZ series stereo microscope can be configured to customer's specifications by choosing one of the three central zoom units DZ.0630, DZ.0800 or DZ.1000 and adding the necessary components for the application. A pair of eyepieces, an ergonomic 0 to 35° tilting head or fixed 20° inclined head, a 0.5x, 1x or 2x common main objective (CMO), a large ergonomic LED stand, a universal or an articulated arm stand. Other accessories, such as a photo/camera unit or dual iris diaphragm, can complete the configuration

CENTRAL ZOOM UNITS

DZ.0630 Central zoom unit 1:6.3 with magnifications from 8 to 50 times

DZ.0800 Central zoom unit 1:8 with magnifications from 8 to 64 times

DZ.1000 Central zoom unit 1:10 with magnifications from 8 to 80 times

HEADS

DZ.2020 Ergonomic binocular 0-35° tilting head without eyepieces

DZ.2025 Binocular 20° tilted head without eyepieces Interpupillary distance from 55 to 75 mm

EYEPIECES

DZ.3010 EWF 10x/22 eyepiece, 1 piece

DZ.3012 EWF 10x/22 eyepiece with micrometer and crosshairs, 1 piece

DZ.3015 WF 15x/16 eyepiece, 1 piece

DZ.3020 WF 20x/12 eyepiece, 1 piece



● *Eyepieces*

IRIS DIAPHRAGMS

DZ.9010 Double iris diaphragms for increased depth of field

OBJECTIVES

DZ.4003 Plan common main objective 0.3x. WD 276 mm

DZ.4005 Plan apochromatic common main objective 0.5x. WD 126 mm

DZ.4010 Plan apochromatic common main objective 1.0x. WD 78 mm

DZ.4020 Plan apochromatic common main objective 2.0x. WD 33 mm

All optics are anti-fungus treated and anti-reflection coated for maximum light throughput

STANDS

DZ.5020 Universal stand without illumination. Dimensions 460(h) x 280 (l) x 400 (d) mm

DZ.5040 Ergonomic stand with transmitted and incident LED illumination. Coaxial coarse and fine adjustments, 100 graduations, 0.015 mm per graduations

65.980 Articulated arm stand for mounting on table without head holder (65.981)

65.981 Head holder 76 mm for DZ series and black articulated arm stand (65.980)

NZ.9025 Articulated arm stand with table clamp (without DZ head holder 65.981)

NZ.9027 Articulated arm stand with heavy stand (without DZ head holder 65.981)

NZ.9042 Stand with rotating mirror and transmitted LED illumination

NZ.9030 Boom (double arm) stand with heavy stand (without head holder NZ.9090)

NZ.9032 Boom (double arm) stand with table clamp (without head holder NZ.9090)

NZ.9090 Head holder, suitable for NZ.9000/9005/9015/9017 /9020/9030 stands

FLUORESCENCE ATTACHMENT

DZ.9050 Attachment for fluorescence with 100 W mercury vapor illumination with GFP-B and GFP-LP filter sets and one 23.2 mm photo port. Supplied with power supply

ACCESSORIES/SPARE PARTS

DZ.9060 Filter cube with GFP-B band-pass filter set for blue excitation, EX 460-500, DM 505, EM 510-560

DZ.9061 Filter cube with GFP-L long-pass filter set for Blue excitation, EX 460-500, DM 505, EM 510

DZ.9049 Empty filter cube

Other premium and premium zero-pixel shift optimized filter sets are also available on request. See end of chapter 5

- *customized configuration model DZ.0800, 2x DZ.3010, DZ.2025, DZ.9005, DZ.9010, DZ.4010 and DZ.5040*



POLARIZATION ATTACHMENTS

DZ.9045 Polarizer, 360° rotatable, to be mounted on common main objectives of DZ series

DZ.9047 Polarizer, 360° rotatable, to be placed on the stage

CAMERA ACCESSORIES

DZ.9005 Photo port attachment with one 23.2 mm tube

DZ.9007 Photo port attachment with two 23.2 mm tubes

DZ.9013 C-mount 1x objective for insertion into photo port attachments

AE.5130 Universal SLR camera adapter with 2x projection lens for 23.2 mm tubes. Needs T2 adapter

AE.5025 T2 adapter for Nikon D digital SLR cameras

AE.5040 T2 adapter for Canon EOS digital SLR cameras

AE.5063 0.7x Objective with C-mount. To be mounted over a 23.2 mm tube of a Z-, M-, F-series

Other T2 adapters on request

MISCELLANEOUS

DZ.9020 Large 185 x 145 mm stage with mechanical X-Y 50 x 50 mm stage, to be moved by hand

DZ.9040 Darkfield attachment for DZ.5040

AE.1112 Micrometer slide, 50 mm/50 divisions

AE.1900 Glass object plate, Ø 100 mm

AE.1903 Acrylic white/black object plate

50.875 Adjustable GEM clamp

SL.5520 LED replacement for incident LED illumination of DZ.5040 stand

DISPOSABLES

AE.1385 100 W HBO mercury vapor bulb for fluorescence

PB.5245 Lens cleaning paper, 100 sheets per pack

PB.5274 Isopropyl alcohol 99% (200 ml)

PB.5275 Cleaning kit: lens cleaning fluid, lint free lens tissues, brush, air blower, cotton swabs

euromex.academy



- *DZ.2020, ergonomic binocular tilting head*

STEREO MICROSCOPES

Z series



Z series

These versatile high-end stereo microscopes are highly appreciated by the professionals of life science research and industry because of the excellent optical and mechanical characteristics of this series



● *ZE.1624 and ST.1735*

product information



HEAD + STAND ST.1735
560 (H) x 160 (w) x 240 mm (d) | 4.5 kg

HIGHLIGHTS

- **Modular system**
- **Binocular and trinocular models**
- **Standard HWF 10x/23 mm eyepieces**
- **Stereo zoom heads with a fixed 45° inclined tubes**
- **Zoom magnification objectives**
- **Superior resolution optics**
- **Multiple stands**
- **10 Years warranty**



● *ZE.1657 - ST.1710*

SPECIFICATIONS

EYEPIECES

Pair of SWF 10x/23 mm eyepieces

HEAD

- Binocular or trinocular heads with a 45° inclined tubes
- Diopter ± 6° adjustment on both tubes for Z series
  Interpupillary distance from 55 to 75 mm
- Optional click-stops

ZOOM MAGNIFICATION OBJECTIVES

- Zoom objective with magnifications from 0.4x to 2.5x
- Zoom objective with magnifications from 0.7x to 4.5x
- Zoom objective with magnifications from 1x to 7x

Zoom objectives with click stops are also available on request
All optics have an anti-reflection coating for maximum light throughput and are anti-fungus treated

STANDS WITHOUT ILLUMINATION

ST.1710 Pillar stand with ST.1790 head holder.
Pillar height 210 mm, diameter Ø 20 mm
Dimensions 250 (h) x 150 (w) x 240 mm (d)

ST.1718 Pillar ergonomically flat stand with ST.1790 head holder. Pillar height 213 mm, diameter Ø 20 mm.
Dimensions 258 (h) x 330 (w) x 306 (d)

Stand with 3 W LED illumination and rotatable double-sided coated mirror



STAND WITH ILLUMINATION

St.1735 LED stand with rotating mirror.
Pillar 240 x 160 x 60 mm (L x W x H) stand with head holder for height adjustment.
Rotatable mirror for oblique LED illumination

BOOM STANDS

ST.1720 Articulated one arm boom stand with a 270 x 270 mm base, 610 mm and Ø 29 mm pillar, with orientable stereo head holder ST.1794. Vertical post 780 mm. Weight 19.5 kg

65.980 Articulated one arm stand to be mounted on table without 83 mm head holder. Depth positioning of stereo head between 33 and 100 cm. WD between 0 and a maximum of 295 mm

65.983 Head holder 85 mm diameter for 65.980

FOCUSING

Coarse adjustment and friction adjustment for head holders for ST.1790, ST.1794, ST1796. The head holders ST.1796 is also equipped with a fine focusing adjustment

PACKAGE CONTENT

Models with illumination are supplied with power cord, dust cover, a spare fuse and user manual. All packed in a polystyrene box

HEAD HOLDERS

Other optional head holders for boom stands

ST.1790 Head holder with coarse adjustment*

ST.1796 Head holder with coarse and fine adjustment*

ST.1794 Orientable head holder with coarse adjustment and opening for one fiber light guide**

** Not suitable for boom stands ST.1720 and 65.980/65.983*

*** Only suitable for boom stand ST.1720*

All head holders have an internal diameter of 84 mm and a friction adjustment



● *ST.1718*

ZOOM STEREO HEADS

MODELS	Binocular	Trinocular	Tilt tubes	Objective zoom	Magnification	WD (mm)	Field of view (mm)
ZE.1624	•		45°	0.7 - 4.5x	7 - 45x	93	32/5.1
ZE.1654		•	45°	0.7 - 4.5x	7 - 45x	93	32/5.1
ZE.1657		•*	45°	0.7 - 4.5x	7 - 45x	104	32/5.1

** When the trinocular tube is engaged, the image is still available in both other tubes*
All zoom stereo heads are supplied with SWF 10x/23 mm eyepieces without eyecups

STANDS

MODELS	Column (mm)	Diameter (mm)	Rack & pinion	Base (w x d mm)	Height (mm)	Head holder	Illumination
ST.1710	210	20		240 x 150	250	ST.1790	
ST.1718	213	20		330 x 306	285	ST.1790	
ST.1720	610	29		780 x 270	650	ST.1794	
ST.1735			•	240 x 160	290		3 W LED
65.980/65.983			•	Ø 1000 *	0/295	65.983	

** Length with the two arms totally extended*

DIMENSIONS

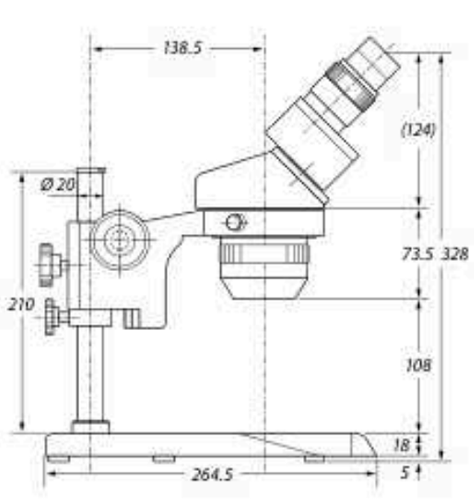

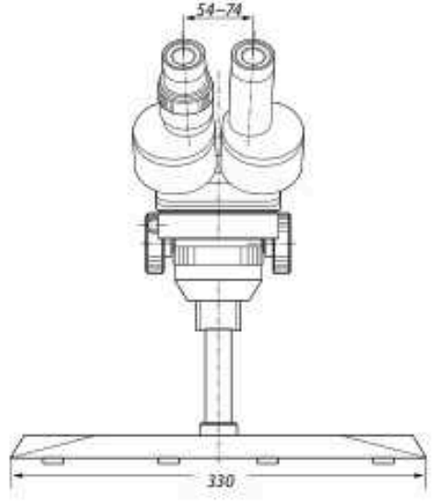

ACCESSORIES AND SPARE PARTS

EYEPIECES

(without eyecups)

AE.1836 Pair of SWF 10x/23 mm eyepieces

AE.1834 Pair of SWF 12.5x/20 mm eyepieces

AE.1840 Pair of SWF 30x/7.5 mm eyepieces

AE.5439 Pair of eyecups

MICROMETER EYEPIECE

(with adjustable lens)

AE.1839 SWF 10x/21 mm with 10 mm/100 micrometer reticle and crosshairs

MICROMETER SLIDE

AE.1112 Object slide 76 x 26 mm with micrometer 50 mm/500, 100 µm/division

ADDITIONAL LENSES

(for ZE.1624, ZE.1654, ZE.1626)

AE.1856 Additional 0.5x lens. WD 150 mm. Maximum object size is 15 mm

AE.1857 Additional 0.75x lens. WD 97 mm

AE.1858 Additional 1.5x lens. WD 50 mm

AE.1859 Additional 2.0x lens. WD 34 mm

ADDITIONAL LENSE

(for ZE.1657)

AE.1818 Additional 1.5x lens. WD 57 mm

WD = working disctance

PROTECTION WINDOW

(to be screwed under the objectives)

AE.1845 Protection window for all heads of ZE series except ZE.1659

MECHANICAL STAGE

AE.1876 Plain stage 145 x 115 mm with 75 x 50 mm mechanical X-Y stage on ball bearings. Horizontal coaxial adjustment. Double Vernier with 0.1 mm graduations. Only with ST.1710

OBJECT PLATES - Ø 94 MM

AE.1882 Acrylic black/white object plate

FILTERS - Ø 40 MM

AE.1897 Frosted glass filter

CAMERA ACCESSORIES

DC.1320 Projection 1x objective with C-mount

DC.1324 Projection 0.5x objective with C-mount for cameras with 1/2" sensor. To be inserted into a 23.2 mm tube

DC.1326 Projection 0.33x objective with C-mount for cameras with 1/3" sensor. To be inserted into a 23.2 mm tube

AE.5130 Universal SLR camera adapter with 2x projection lens for 23.2 mm tubes. Needs T2 adapter

AE.5025 T2 adapter for Nikon D digital SLR cameras

AE.5040 T2 adapter for Canon EOS digital SLR cameras

Other T2 adapters on request



● *AE.1877*



● *AE.1876*



● *AE.1896*

about microscope optics

RESOLVING POWER

A human eye cannot distinguish two points when these are closer than approximately 0.3 mm or 300 µm to each other. That is what is called resolving power*; the capacity to resolve two points which are close together or optical resolution*, the ability of an imaging system to resolve detail

For details smaller than approximately 3 µm, one could better choose an optical compound microscope to resolve these details

MAGNIFICATION

If one needs to detect details of 10 µm, one needs at least 300 µm / 10 µm = 30x magnification in order to resolve this detail. Knowing that conventional stereo microscopes can magnify - without the help of additional lenses and without introducing additional optical aberrations – up to approximately max. 100 times, the smallest detail that a stereo microscope can resolve is 300 µm / 100 = 3 µm

OPTICAL RESOLUTION

The resolution of an optical microscope can be defined as the shortest distance between two points that the microscope can reveal for a human eye or camera

The theoretical maximum resolution is limited by the diffraction laws of physics and is equal to

r = 1.22 λ / (N.A. of objective + N.A. condenser)

with r = resolution, N.A. = numerical aperture, λ = imaging wavelength

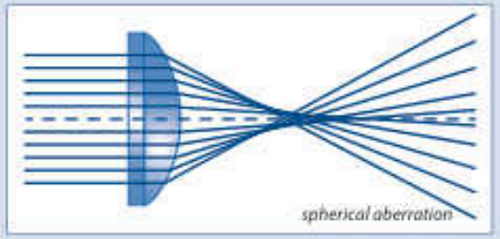

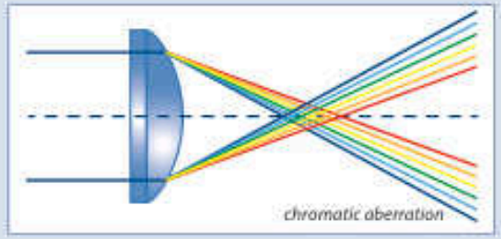

ABERRATIONS

In practice, the resolution of a microscope is lower than the theoretical resolution due to optical aberrations, improper illumination or bad alignment of the optics and components of the microscope. Despite corrections for chromatic and spherical aberrations, coma, astigmatism and distortion, the real maximum resolution of a microscope with a 100x objective is about 0.25 µm for 550 nm light rays

Chromatic aberration	Difference in focus of different colors caused by difference in refractive indices for each wavelength
Spherical aberration	Difference in focus caused by defects or irregularities on the surface of a lens
Astigmatism	Rays traveling through two perpendicular planes having different focal planes
Coma aberration	Variation in magnification over the entrance pupil
Distortion	Stretching of an image as a variation in magnification across the lens field



iscope

FEATURED

iScope

Discover the new digital heads for the iScope, Achios-X Observer, - Inverso and Delphi-X Observer, page 322

digital solutions

Get ready to discover the digital world of microscopy with the newest Euromex digital educational, laboratory and materials science products. The broad Euromex product range of digital cameras and digital microscopes with built-in camera offer the best matching solutions for your specific application needs

Euromex digital products incorporate all the latest available technology in this field, such as WiFi, HDMI, CMOS, HD-CMOS and sCMOS sensors, especially designed for fluorescent microscopy. Our digital solutions package includes the powerful ImageFocus software for image analysis

digital solutions

education • life science • industry







product information

DIGITAL MICROSCOPES • 306
MACROZOOMS • 326
USB CAMERAS • 340
WiFi CAMERAS • 344
COOLED CAMERA • 345
HD CAMERA • 346
TABLET CAMERAS • 350
SOFTWARE • 352
ADAPTERS • 358

BlueLine



MicroBlue

digital microscopes with built-in 5.0 MP USB-2.0 camera

The modern MicroBlue is an entry-level microscope, especially appreciated when budgets are limited. There are two versions of the digital MicroBlue; one with a built-in digital camera, the other with an LCD screen. Available with plain or integrated mechanical X-Y stage. All models are equipped with 35 mm achromatic objectives

product information





● *MB.1055*

MB.1055
420 (h) x 151 (w) x 202 mm (d) | 2.4 kg
MB.1051-LCD
378 (h) x 179 (w) x 202 mm (d) | 2.48 kg

HIGHLIGHTS

- **New back panel with smart storage solutions**
- **Dual Illumination System: white & halogen colored LED**
- **Universal USB-C 5V Power**
- **Economic microscopes for education**
- **Built-in digital 1.3 or 5.0 MP USB-2.0 camera**
- **7 inch LCD screen**
- **Ergonomic carrying grip**
- **5 Years warranty (2 years on camera)**



● *Back panel of the MicroBlue*

SPECIFICATIONS

CAMERA

All the MicroBlue build-in digital camera microscopes are equipped with:

- 1.3 MP 1/2.5" CMOS USB-2.0 camera, 2560 x 1920, max. 30 fps*, ImageFocus 4 software
- a 5.0 MP 1/2.8" CMOS USB-2.0 camera, 1720 x 952 pixels, max. 30 fps*, ImageFocus Plus software
- USB-2.0 cable and a 1 mm/100 calibration slide
- Warranty for the camera is two years

SOFTWARE

- The capture and analysis ImageFocus software allows to save images in .jpg, .tif, .bmp or .dicom formats as well as .avi format videos
- Measurements and annotations can be done on live or captured images
- Compatible with Windows 10 and higher, both 32 and 64 bits configurations. A MacOs version is also available
- Free software can be downloaded on our website

For full microscope specifications and accessories see chapter 1: Biological microscopes

LCD SCREEN

- All the MicroBlue LCD microscopes are equipped with 7" IPS LCD screen
- Screen resolution 1920 x 1080 @ 30 fps*
- Save images and videos directly to micro SD card
- Image resolution up to 1844 x 1080 in .JPEG format
- Video resolution 1280 x 720 .AVI format
- Basic measurement function (line) with calibration. Calibration slide available as option
- Warranty for the screen is 2 years

** Frame rates were determined at optimal conditions*

MODELS	Digital LCD	Digital mono	Maximum objectives	4/10/S40x objectives	S60x objective	S100x oil objective	Mechanical X-Y stage	Abbe condenser	LED	Batteries
MB.1001-LCD	•		3	•					•	•
MB.1051-LCD	•		4	•			•	•	•	•
MB.1055-X		•	4	•			•	•	•	•
MB.1655-X		•	4	•	•		•	•	•	•
MB.1155-X		•	4	•		•	•	•	•	•

-X = -1; model equipped with 1.3 MP camera
-X = -5; model equipped with 5.0 MP camera

BlueLine



EcoBlue

digital microscopes with built-in 5.0 MP USB-2.0 camera

The digital microscopes are equipped with WF 10x/18mm eyepieces, a quadruple nosepiece, achromatic objectives, a 123 x 119 mm stage with two clamps or mechanical X-Y stage, Abbe condenser and a 1 W LED illumination with integrated 100-240 V power supply



● *EC.1005*

product information



EC.1105 / EC.1005
355.00 x 270.00 x 220.00 mm (l) | 2.6 kg

HIGHLIGHTS

- **Economic microscopes for education**
- **Monocular and binocular models**
- **Built-in digital 5.0 MP USB-2.0 camera**
- **Color coded condenser**
- **Dual illumination system: white & halogen colored (Neo)LED**
- **All models have rechargeable AA batteries and external 100-240 Vac mains/charger adapter**
- **Ergonomic carrying grip**
- **5 Years warranty (2 years on camera)**



SPECIFICATIONS

CAMERA

All the EcoBlue digital microscopes are provided with a 5.0 MP 1/2.8" CMOS USB-2.0 camera, a maximum of resolution 2560 x 1920, 24 bits color depth, up to 30 fps*. USB-2.0 cable and a 1 mm/100 calibration slide

SOFTWARE

The capture and analysis ImageFocus Plus software allows you to save images in .jpg, .tif, .bmp or .dicom formats as well as .avi format videos. Measurements and annotations can be done on live or captured images. Compatible with Windows 10 and higher, both 32 and 64 bits configurations. A MacOS version is also available. Free software can be downloaded from our website

● *EcoBlue supplied with achromatic objectives*

For full microscope specifications and accessories see chapter 1: Biological microscopes

** Frame rates were determined at optimal conditions*

MODELS	Monocular	Binocular	4x, 10x, S40x objectives	S60x objective	S100x oil objective	Mechanical X-Y stage	1 W Dual color LED	1 W Dual color NeoLED™
EC.1005	•		•				•	
EC.1105	•		•		•		•	
EC.1607		•	•	•				•
EC.1055	•		•			•	•	
EC.1155	•		•		•	•	•	
EC.1157		•	•		•	•		•
EC.1657		•	•	•		•		•

DIGITAL MICROSCOPES

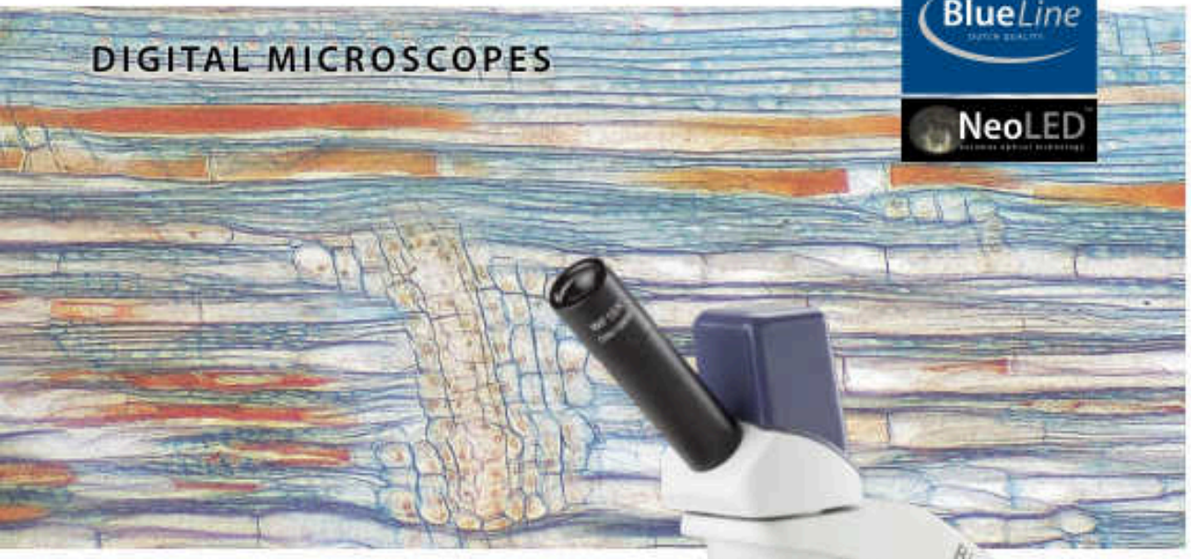

BlueLine

NeoLED™

BioBlue

digital microscopes

Digital microscopes are available with the traditional eyepieces included, with or without a windows tablet and a fully digital version that is supplied with an LCD screen only

The digital models of the BioBlue set a new standard in digital microscopy, with high quality imaging, both optically and digitally. The general microscope specifications, like the mechanical X-Y stage and objectives are identical to the non-digital microscopes, found in chapter 1

product information



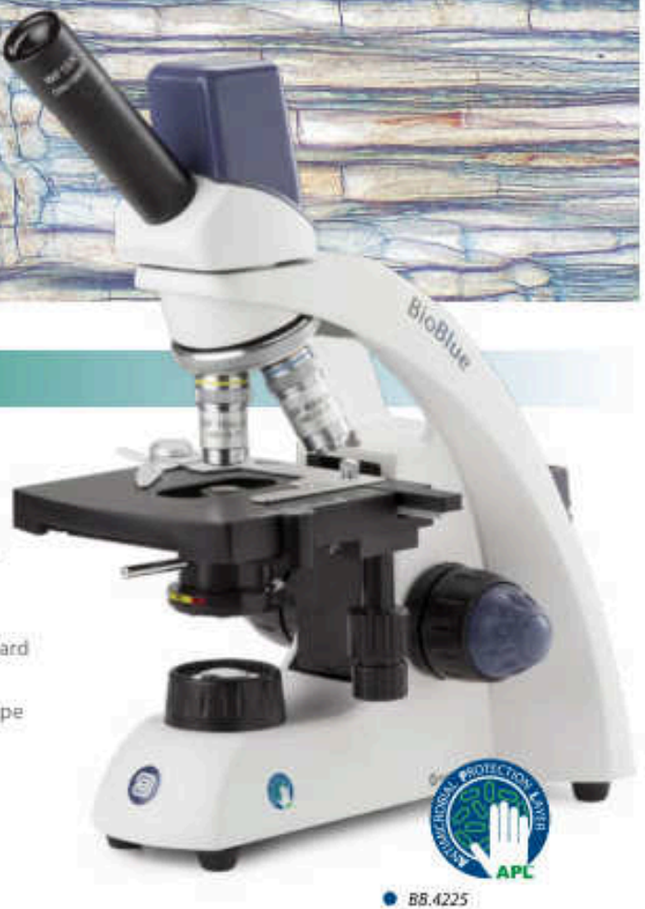

● *BB.4225*

BB.4225 / BB.4245 /BB.4255
140 (h) x 155 (w) x 230 mm (d) | 3.4 kg
BB.4267 / BB.4269
360 (h) x 155 (w) x 230 mm (d) | 4.1 kg

HIGHLIGHTS

- New back panel with smart storage solutions
- Dual Illumination System: white & halogen colored LED
- Universal USB-C 5V Power
- Monocular and binocular models
- Models with a 7" LCD screen
- Reserved quadruple nosepiece for semi plan objectives
- Built-in digital 5.0 MP USB-2.0 camera
- Integrated mechanical X-Y stage
- LED and NeoLED™ illumination
- Cordless operation
- 10 Years warranty (2 years on camera)



● *BB.4220-LCD*

SPECIFICATIONS

MODELS WITH 5 MP CAMERA

All the BioBlue digital microscopes are equipped with a 5.0 MP 1/2.8" CMOS USB-2.0 camera, a maximum of resolution 2560 x 1920, 24 bits color depth, up to 30 frames per second* Supplied with USB-2.0 cable and a 1 mm/100 calibration slide

SOFTWARE

The capture and analysis ImageFocus Plus software allows to save images in .jpg, .tif, .bmp or .dicom formats as well as .avi format videos. Measurements and annotations can be done on live or captured images. Compatible with Windows 10 and higher, both 32 and 64 bits configurations. A MacOS version is also available. Free software can be downloaded from our website

MODELS WITH LCD SCREEN

The BioBlue is also available with a 7" LCD screen, with all the features of the regular BioBlue. This screen allows live viewing, saving images and videos directly to a micro SD card and even has a basic line measurement function included. The LCD screen can only be operated as a stand alone.

Screen resolution 1920 x 1080 @ 30 fps*, image resolution up to 1844 x 1080 in JPG and video resolution 1280 x 720 AVI format

For full microscope specifications and accessories see chapter 1: Biological microscopes

** Frame rates were determined at optimal conditions*

MODELS	Mono	Bino	LCD	Tablet	4/10/40x SMP objectives	Semi plan 560x objective	Semi plan 5100x oil objective	Integrated X-Y stage	1 W Dual color LED	1 W Dual color NeoLED™
BB.4205	•				•				•	
BB.4225	•				•			•	•	
BB.4245	•				•	•		•	•	
BB.4255	•				•		•	•	•	
BB.4267		•			•		•	•		•
BB.4269		•			•			•		•
BB.4200-LCD			•		•				•	
BB.4220-LCD			•		•			•	•	
BB.4267-T		•		•	•		•	•		•
BB.4269-T		•		•	•	•		•		•

MODELS WITH TABLET AND 5 MP CAMERA

The 5.1 MP CMOS camera ensures excellent color reproduction and is connected to a Windows tablet PC with vivid color graphic display for enabling visualisation of microscopic samples and enjoying the great features of our ImageFocus image analysis software. The tablet represents a 2-in-1 solution as it can be disconnected and used as a real windows tablet. Being Windows-based and due to its large touch screen of 12.1" users are sure to have responsive and smooth control



SPECIFICATIONS

Software and camera as above (5 MP + ImageFocus Plus)

Processor	Quad Core max 3.3 GHz HD graphics processor
Screen	12.1 inch IPS 2160*1440 / 3:2
Memory	12 GB
Storage	512 GB Flash HDD, micro SD/SDHC sloth for cards up to 64 GB
Webcam	2 MP front and 5MP rear camera
Connectivity	Micro USB 2.0, Micro HDMI, USB-C, WiFi 6 and Bluetooth 4.0
Audio	Stereo with 3.5 mm audio jack, internal microphone and speaker
Battery	Lithium, 38Wh, 5000mA
Weight	0.8 KG (tablet) 4.8 kg (complete)
System	Windows 11
Software	ImageFocus Plus



about

camera resolution and limits

Resolution of a camera system is the ability to reproduce object detail on screen. In practice it is depending on factors such as the good lighting of the object, the sensor pixel size and the capabilities of the optics. The smaller the object detail, the higher the required resolution

The highest frequency – expressed as line pair per mm that can be resolved – is 2 pixels or one line pair, the so-called **Nyquist frequency**

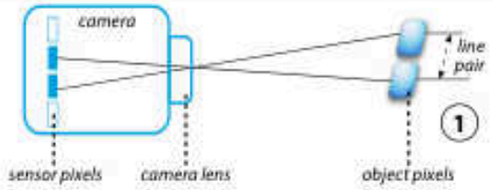

(1) *Space between objects is large enough to be detected by minimum two pixels of the camera sensor*

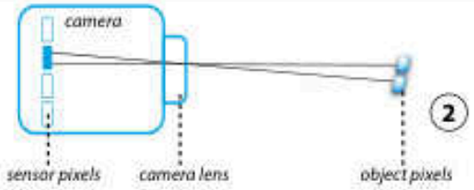

(2) *Space between objects is too small to be detected by minimum two pixels of the camera sensor*

THE LIMITING SENSOR RESOLUTION

(image space resolution) of a camera is commonly calculated as:

$$\left(\frac{1\ \text{lp}}{2 \times s}\right) \times \left(\frac{1000\mu\text{m}}{1\ \text{mm}}\right)$$

whereby **s** = pixel size (in µm)
and expressed as line pair per mm (Lp/mm)

The formula shows that a sensor with smaller pixels will have higher image space resolution:

Pixel size	Image Space resolution
1.67	229 LP/mm
2.2	227 LP/mm
3.45	145 LP/mm
5.5	90 LP/mm

Considering the Euromex DC.18000-Pro 2/3 inch camera which is equipped with 4921 x 3684 pixels camera on a 8.6 x 6.6 mm large sensor

THE NYQUIST IMAGE SPACE RESOLUTION

can also be calculated as 1/2 x sampling pixels/mm (Lp/mm) or:

- **Horizontal**
  4921 / 8.6 = 572 (sampling pixels) x 0.5 = 286 Lp/mm
- **Vertical**
  3684 / 6.6 = 558 (sampling pixels) x 0.5 = 279 Lp/mm

The Nyquist object space resolution or the smallest detail that could be theoreticaly resolved is then equal to:
1000 mm / (286 Lp/mm) or 3.5 µm
However, taken into account the manufacturing limitations and inevitable optical aberrations, the real image space resolution can be calculated as:
1/2 x Kell factor (approx 0.70) x sampling pixels (Lp/mm) or:

- **Horizontal**
  4921 / 8.6 = 572 (sampling pixels) x 0.35 = 200 Lp/mm
- **Vertical**
  3684 / 6.6 = 558 (sampling pixels) x 0.35 = 195 Lp/mm

or approx. 1000 mm / 200 Lp/mm or 5 µm
In comparison, the by physics diffraction limited object space resolution (smallesy detail that ever can be observerd through the eyepieces of a optical compound microscope, is around 0.20 µm



BlueScope

digital microscopes

The digital models of the blueScope are among the advanced in digital microscopy, with high quality imaging, both optically and digitally. Versions with traditional eyepieces and a digital camera, fully digital versions or a combination with a windows tablet are available

The general microscope specifications, like the mechanical stage and objectives are identical to the non-digital microscopes found in chapter 1 or 2

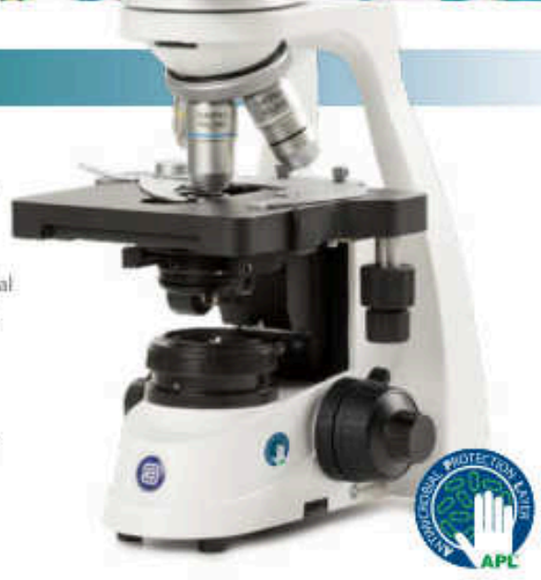

● *BL.1057-T*



BB.4225 / BB.4245 /BB.4255
140 (h) x 155 (w) x 230 mm (d) | 3.4 kg
BB.4267 / BB.4269
360 (h) x 155 (w) x 230 mm (d) | 4.1 kg

HIGHLIGHTS

- **Monocular and binocular models**
- **Full digital models with a 7" LCD screen**
- **Models with a windows tablet**
- **Dual Illumination System: white & halogen colored LED**
- **Universal USB-C 5V Power**
- **Built-in digital 5.0 MP USB-2.0 camera**
- **10 Years warranty (2 years on camera)**



● *BL.1050-LCD*

SPECIFICATIONS

CAMERA

The digital bScope microscopes are equipped with a 5.0 MP 1/2.5 inch CMOS USB-2.0 camera, 24 bits color depth, 7 frames per second (2592 x 1944 pixels) or 27 frames per second (1280 x 960 pixels)*. Dynamic range is 76 dB and signal/noise ratio 41 dB. Supplied with USB-2.0 cable and a micrometer 1mm/100 calibration slide

SOFTWARE

The capture and analysis ImageFocus Alpha software allows to save images in .jpg, .tif, .bmp or .dicom formats as well as .avi format videos. Measurements and annotations can be done on live or captured images. Compatible with Windows 10 and higher, both 32 and 64 bits configurations. A MacOS version is also available. Free software can be downloaded from our website

MODELS WITH TABLET AND 5 MP CAMERA

The 5.0 MP CMOS camera ensures excellent color reproduction and is connected to a Windows tablet PC with vivid color graphic display for enabling visualization of microscopic samples and enjoying the great features of our ImageFocus image analysis software. The tablet represents a 2-in-1 solution as it can be disconnected and used as a real windows tablet. Being Windows-based and due to its large touch screen of 10.1" users are sure to have responsive and smooth control

SPECIFICATIONS

Software and camera as above (5 MP + ImageFocus Alpha)

MODELS WITH LCD SCREEN

The BlueScope is also available with a 7" LCD screen, with all the features of the regular BioBlue. This screen allows live viewing, saving images and videos directly to a micro SD card and even has a basic line measurement function included. The HD LCD screen can only be operated as a stand alone.
Screen resolution 1920 x 1080 @ 30 fps, image resolution up to 1844 x 1080 in JPG and video resolution 1280 x 720 AVI format

** Frame rates were determined at optimal conditions*

For full microscope specifications and accessories see chapter 1 or 3

BlueLine



EduBlue

digital microscopes with built-in 4.0 MP USB-2.0 camera

The EduBlue stereo microscopes are designed specifically for educational purposes and are equipped with WF 10x/20 mm eyepieces, a revolving nosepiece with double or triple magnification objectives



● *ED.1805-SW*

product information

With transmitted and incident 1 W LED illuminations, 60 mm working distance. Supplied with three rechargeable AA batteries for corded and cordless operation. Also supplied with an external power supply



ED.1X0S-S / ED.1X0S-SW
260 (h) x 105 (w) x 220 mm (d) | 2.4 kg



● *Triple magnification*

HIGHLIGHTS

- **Economical binocular models**
- **Universal USB-C 5V Power**
- **Dual illumination system (see EduBlue chapter 2)**
- **Dual and triple magnification objectives**
- **Cordless operation**
- **Built-in digital 4.0 MP USB-2.0 camera**
- **Models with and without WiFi**
- **LED illuminators**
- **Ergonomic carrying grip**
- **5 Years warranty (2 years on camera)**

SPECIFICATIONS

USB CAMERA

These EduBlue digital microscopes are provided with a 4.0 MP 1/1.8" CMOS USB-2.0 camera, a maximum of resolution of 2688 x 1512, 24 bits color depth, up to 30 frames per second*. Supplied with USB-2.0 cable and a 1 mm/100 calibration slide

SOFTWARE

The capture and analysis ImageFocus Alpha software allows to save images in .jpg, .tif, .bmp or .dicom formats as well as .avi format videos. Measurements and annotations can be done on live or captured images. Compatible with Windows 10 and higher, both 32 and 64 bits configurations. A MacOS version is also available. Free software can be downloaded from our website

WIFI + USB CAMERA

These EduBlue digital microscopes are provided with a 4.0 MP 1/1.8" CMOS USB-2.0 WiFi camera, a maximum resolution of 2688 x 1512, 24 bits color depth, up to 30 frames per second. Connects to ethernet, computer or mobile device. Supplied with USB-2.0 cable and a 1 mm/100 calibration slide

SOFTWARE

The capture and analysis ImageFocus Alpha software allows to save images in .jpg, .tif, .bmp or .dicom formats as well as .avi format videos. Measurements and annotations can be done on live or captured images. Compatible with Windows 10 and higher, both 32 and 64 bits configurations. A MacOS version is also available. Free software can be downloaded from our website

** Frame rates were determined at optimal conditions*

For full microscope specifications and accessories see chapter 2: Stereo microscopes

MODELS	Binocular	2x/ 4x objectives	1x/ 2x/ 4x objectives	USB + WIFI +LAN camera	Software	Connectivity	Rack & pinion stand
ED.1405-SW	•	•		•	IF Alpha		•
ED.1805-SW	•		•	•	IF Alpha		•

BlueLine



EduBlue LCD

digital microscope with built-in 5.0 MP camera

The EduBlue LCD microscope is built around one 1 to 4 times zoom objective and enables observation of all kinds of objects directly on a 9" LCD screen. These kinds of microscopes are well-suited for education

The EduBlue LCD is equipped with a built-in 5 MP high-definition CMOS camera with 2592 x 1944 pixels

product information



● *ED.3000*



ED.3000
425 x 475 (H) x 180 (W) x 230 mm (D) | 2.3 kg



● *Adjustable screen*

HIGHLIGHTS

- **MonoZoom stand-alone digital microscope**
- **Magnification 8x up to 54x optically and up to 540x digitally**
- **91 mm working distance**
- **Built-in 21 LED incident ringlight, five intensity positions**
- **Built-in 7 LED transmitted, two intensity positions**
- **Built-in 5 MP HD camera**
- **HD 9-inch screen**
- **Universal USB-C 5V Power**
- **Metal stand**
- **3 Years warranty (2 years on camera)**

SPECIFICATIONS

CENTRAL ZOOM OBJECTIVE

The EduBlue LCD ED.3000 features a single optical zoom objective with a 0.7 to 4.5 zoom. This allows an on-screen magnification from 8 to 54x. Zoom adjustments engravings on 0.7x 0.8x 1x 1.5x 2x 3x 4x and 4.5x. The working distance is 91 mm. A digital zoom up to 10x is available within the software, allowing a digital magnification up to 540x

STAND

The central Zoom Objective with attached screen and LED ringlight is mounted on a rack and pinion system that sits on a 30 x 180 mm metal stand

ILLUMINATION

Two types of illumination are available:

- An integrated 21 LED incident ringlight illumination (5.500 K) with five intensity positions
- A 7 LED transmitted illumination (5.785 K) with two intensity positions, integrated in the base

BUILT-IN CAMERA

Built-in HD 5 MP CMOS high speed (60 fps) camera with attached 9" screen. There is one USB port for a max. 16 GB SD storage card for captured images. The operator can take and save images to the SD card by pressing on a capture button at the left side of the screen. Images are saved in the .jpg format and videos are saved in .avi format

BUILT-IN SOFTWARE

The built-in on screen software is driven by the supplied computer mouse and features functions such as Capture image, Freeze image, Automatic white balance, Automatic exposition, File manager, Grids. Also camera settings such as Exposure time, Gain, Saturation, Contrast, Sharpness and HDR

PACKAGE CONTENT

Supplied with 16 GB SD card, black/white object plate, a glass transparent object plate and external 12V / 2A power supply

bscope

NeoLED



bScope

digital microscopes with built-in 5.0 MP USB-2.0 camera

The versatile and evolutive bScope microscopes are well-equipped and intensively used in universities, small to mid-sized laboratories and for veterinary applications

The digital bScope comes with WF 10x/20 mm eyepieces and is exclusive available in binocular versions. Complete with E-plan IOS and Plan IOS infinity corrected objectives for brightfield observations

product information



- *BS.1157-EPLi*



BS.1157-PLi
40h (h) x 195 (w) x 235 (d) | 7.1 kg

HIGHLIGHTS

- Binocular model
- Color coded condenser
- Diopter adjustment on both tubes
- Integrated 5.0 MP CMOS color USB.2 camera
- 2592 x 1944 pixels
- 7 frames per second (2592 x 1944 pixels)*
- 27 frames per second (1280 x 960 pixels)*
- 10 Years warranty (2 years on camera)

DIMENSIONS

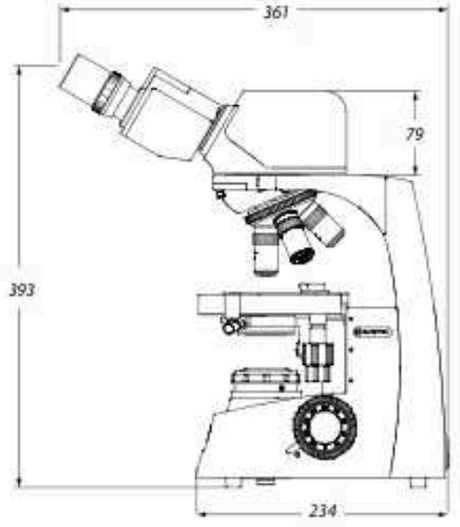

SPECIFICATIONS

CAMERA

The digital bScope microscopes are equipped with a 5.0 MP 1/2.5 inch CMOS USB-2.0 camera, 24 bits color depth, 7 frames per second (2592 x 1944 pixels) or 27 frames per second (1280 x 960 pixels)*. Dynamic range is 76 dB and signal/noise ratio 41 dB. Supplied with USB-2.0 cable and a micrometer 1mm/100 calibration slide

SOFTWARE

The capture and analysis ImageFocus Alpha software allows to save images in .jpg, .tif, .bmp or .dicom formats as well as .avi format videos. Measurements and annotations can be done on live or captured images. Compatible with Windows 10 and higher, both 32 and 64 bits configurations. A MacOS version is also available. Free software can be downloaded from our website

** Frame rates were determined at optimal conditions*

For full microscope specifications and accessories see chapter 1 or 3

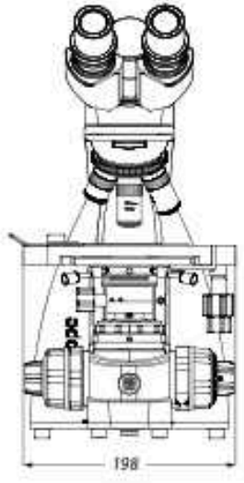

MODELS	binocular head	HWF 10x/20 mm eyepieces	Quintuple nosepiece E-plan IOS 4/10/540/5100x oil	Quintuple nosepiece plan IOS 4/10/540/5100x oil	Köhler NeoLED™
BS.1157-EPLi	•	•	•		•
BS.1157-PLi	•	•		•	•

All models can optionally be supplied with three rechargeable AA batteries



Digital microscopes

iScope, Achios-X Observer, Achios-X Inverso and Delphi-X Observer

This digital solution for the iScope, Delphi-X Observer, Achios-X Observer and Achios-X Inverso microscopes uses an Ultra HD camera together with a high resolution 13" screen, to bring the most vivid images directly to you. This is extremely useful for demonstrations or for educational applications

This digital solution can work in two modes:

- A stand-alone mode, where the mouse driven built-in software enables the capturing of images and recording of videos as well as a full range of measuring functions and playback functions

No PC startup delay and no need for any computer knowledge

- The option either to be connected to a PC, or to stream images to different WiFi enabled devices, such as smartphones, tablets or computers





● *AX.1152-PLi + AX.DIGI-ADD*

HIGHLIGHTS

- **Extremely usefull for discussions, demonstrations and education**
- **Real time images directly on 13"HD screen**
- **3840 x 2160 pixels, 60 fps*, H264 codec**
- **Ultra HD 2160p, 8.3 MP, 1/8 inch color 4K Sony sensor**
- **Built-in mouse-driven software**
- **Interfaces: HDMI, USB-3, Ethernet, WiFi**
- **Stand alone mode or with computer**



● *IS.1152-PLi + IS.DIGI -ADD*



● *DX.1152-PLi + DX.DIGI-ADD*

** Frame rates were determined at optimal conditions*

COMPUTER CONTROLLED MODE

Besides working in the stand alone mode of the camera, you can also choose to connect the camera to a computer. Thus enjoying even more features of the Euromex ImageFocus Alpha software. Such as saving captured images in JPG, TIFF or BMP formats and recording videos in .avi format directly on the hard drive. The software offers different measurement features on live and captured images and also full control over the camera parameters

WIFI MODE

The system streams high resolution images simultaneously to several WiFi enabled smartphones, tablets or computers with iOS, Android or Windows operating systems. Ideal for demonstrations where remote viewing is needed

An Android app for this camera is available on www.euromex.com. IOS app can be downloaded from the App Store (free of charge)

MODELS

Ordering is based on the standard iScope, Achios-X Observer, Delphi-X Observer and Achios-X Inverso model rerferences, together with the corresponding DIGI-ADD reference

For example

IS.xxxx-xxx + IS.DIGI-ADD
AX.xxxx-xxx + AX.DIGI-ADD
DX.xxxx-xxx + DX.DIGI-ADD
AI.xxxx-xxx + AI.DIGI-ADD

For further information on the microscope models, please refer to the specific microscope section in this catalog



- *Control of the camera*



- *AI.4058-PLPHi + AI.DIGI-ADD*

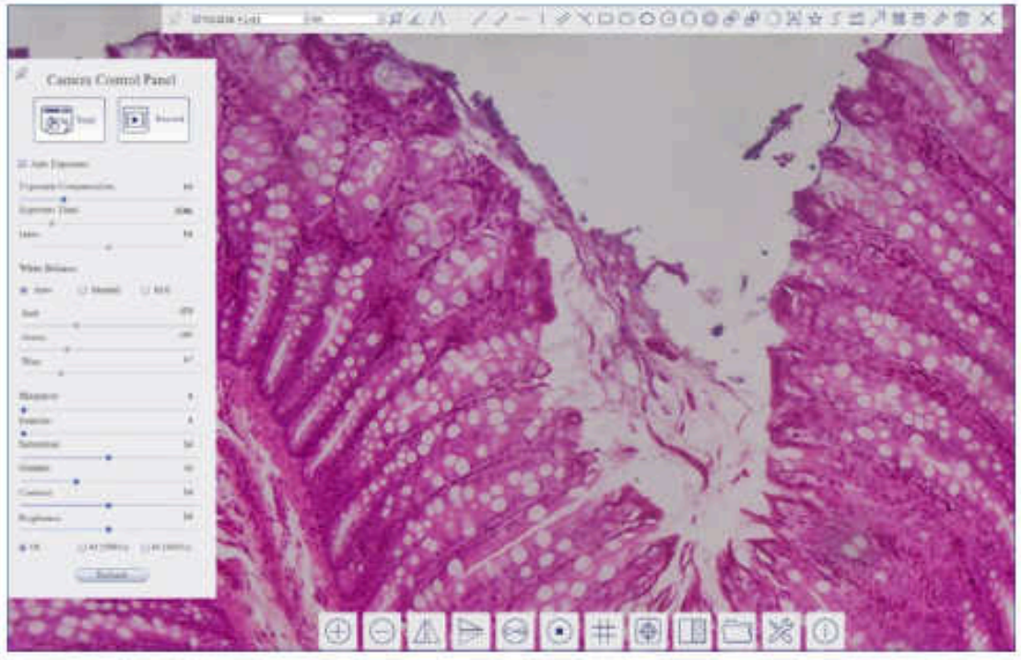

- *Actual view of the screen. The menus pop-up automatically by mouse control*

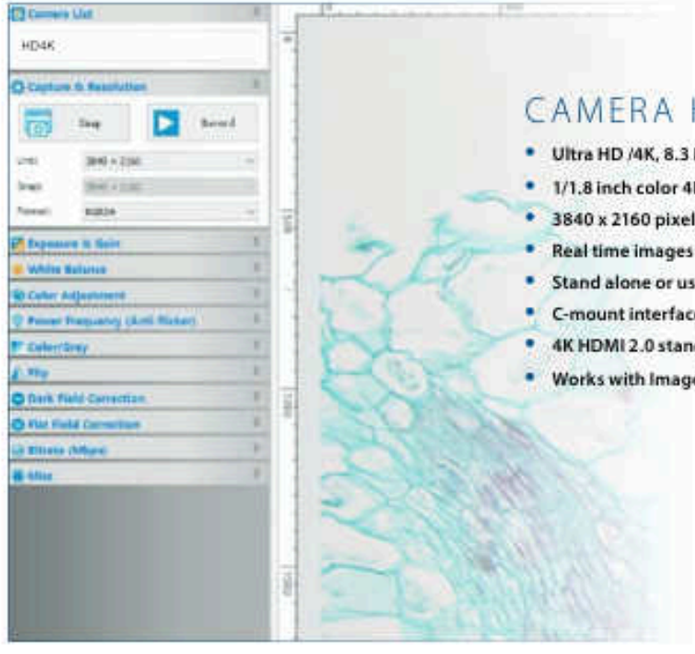

CAMERA HIGHLIGHTS

- **Ultra HD /4K, 8.3 MP**
- **1/1.8 inch color 4K Sony sensor**
- **3840 x 2160 pixels, 60 fps**
- **Real time images directly on TV, monitor or beamer**
- **Stand alone or used via PC or Mac**
- **C-mount interface**
- **4K HDMI 2.0 standard**
- **Works with ImageFocus Alpha software**



MZ.4500

macrozoom

The high-end MacroZoom is built around one 0.7 to 4.5 times optical zoom objective and must be used in combination with C-mount types of cameras with HD screens or computer screens. With a working distance of 105 mm it is highly suitable for repairs, tooling engineers and visual inspections

A standard heavy metal base makes the whole system very stable for adding all kinds of illumination systems and camera systems

- *MZ.4500*

product information

Warranty

MZ.4500
111 (h) 320 (w) 285 mm (d) | 3.06 kg



HIGHLIGHTS

- **Stand-alone**
- **Zoom semi-apochromatic objective**
- **Zoom up to 0.7x to 4.5x**
- **C-mount with 0.4x objective**
- **105 mm working distance**
- **Without illumination**
- **Metal stand**
- **2 Years warranty**

SPECIFICATIONS

CENTRAL ZOOM OBJECTIVE

The MacroZoom MZ.4500 features a single optical zoom objective with a 0.7x to 4.5x zoom magnification. Zoom adjustments engravings on 1, 1.5, 2, 3 and 4.5x. The working distance is 105 mm

STAND

The MacroZoom is mounted on a 230 mm height pillar (Ø 32 mm) and holder (Ø 39/50 mm) that sits on a metal 320 x 260 x 16/25 mm metal stand

CAMERA SYSTEMS

Any of our digital C-mount cameras (in this chapter) can be used together with the MacroZoom

PACKAGING

Supplied with dust cover and packed in a polystyrene box



- *The MZ.4500 in combination with the VC.3036-HDS*



MZ.4600

digital macrozoom

This entry-level digital MacroZoom is equipped with a 0.7 to 5x zoom objective enables direct inspection of objects on external HD screen (not supplied). The mouse-driven built-in software control the camera parameters and enables measurements on screen, capturing and saving .jpg or .bmp format pictures and .mp4 format video on an USB memory stick

The MZ.4600 has a built-in high-definition 1080p 2 MP camera which can deliver up to 60 images per seconds and needs to be connected to an external stand-alone HD screen



- *MZ.4600*

product information



MZ.4600
32 x (w) 320 (w) 260 mm (d) / 4.4 kg

HIGHLIGHTS

- **MonoZoom stand-alone digital microscope**
- **Optical zoom from 0.7x up to 5x**
- **Magnification on screen from 2.5 up to 19x**
- **100 mm working distance**
- **Built-in 1080p 2 MP HD camera**
- **Built-in mouse driven on-screen software**
- **Measurement function on screen**
- **jpg or bmp saved images**
- **mp4 video recording up to max 2 hrs**
- **Removable 32 GB memory stick**
- **Metal stand**
- **2 Years warranty**



- *MZ.4600-NZ*
- *MZ.4605 on NZ.9047*

SPECIFICATIONS

MACROZOOM OBJECTIVE

The Digital MacroZoom MZ.46000 features a single zoom objective with a 0.7 to 5x zoom magnification. Zoom adjustment engravings on 0.7, 1, 1.5, 2, 2.5, 3, 4 and 5x. The working distance is 100 mm. An optional 3D attachment enables a 45° angle observation

STAND

- Standard pillar stand (Ø 32 mm) that sits on a large 320 x 260 mm metal stand without illumination
- Travel range is 50 mm, max. object height 22 cm
- The MacroZoom objective can also be mounted on the NexiusZoom stands. (for instance, the NZ.9047, see dedicated datasheet on the website)

ILLUMINATION

The MZ.4600 comes with a 144 LED ringlight, adjustable from the side of the MacroZoom body

BUILT- IN CAMERA

Built-in HD 1080p high-definition 2 MP 1/2.8" CMOS high speed camera, 1920 x 1080 pixels, 2.9 µm x 2.9 µm pixels and 60 images per seconds. Magnification on screen from 2.5x up to 19x with field of view from 210 x 120 mm up to 27 x 15 mm based on a 24 inch HD screen. The camera has one HDMI output that needs to be connected to an external HD screen (not supplied). Two USB ports accept the supplied 32 GB USB memory stick (up to 64 GB) and a supplied wireless mouse that drives the built-in on-screen software. The operator can take .jpg or .bmp images and .mp4 video's and save them to an external supplied memory stick

BUILT- IN SOFTWARE

The built-in on-screen software (only English language) is mouse driven and features functions such as capture or record images, automatic or manual white balance, color adjustments, file manager, grids, flip/mirror, freese image, WDR (white dark regulation), crosshair and crosslines, text annotations. Camera settings such as automatic or manual exposition time, gain, brightness, saturation, contrast, sharpness, digital 1-6x zoom are available. Measurement functions are also available from the software such as line, polygon circle, rectangle, angle, arc. Images are saved in .jpg or .bmp format and video in .mp4 videos format

PACKAGE CONTENT MZ.4600

Supplied with

- Digital MacroZoom body with ringlight illumination
- 32 GB memory stick, mouse, HDMI cable for HD screen, external 100-240 Vac / 12Vdc / 3A power supply
- Standard pillar stand with head holder, without illumination (MZ.4610)

ORDER PRODUCT REFERENCES:

MZ.4600 MacroZoom body with standard stand

MZ.4600-NZ MacroZoom body with NexiusZoom stand (NZ.9018), equipped with two 2 W gooseneck LED illuminations

MZ.4605 MacroZoom body with ringlight illumination

MZ.4610 Standard* stand for MZ body MZ.4605

MZ.4615 3D attachment for observation under 45° angle*

MZ.4625 Additional 0.5x lens working distance 165 mm

MZ.4627 Additional 0.7x lens working distance 128 mm

MZ.4622 Additional 2x lens working distance 40 mm



● *3-D attachment MZ.4615*
Below: view from above and from a 45° angle

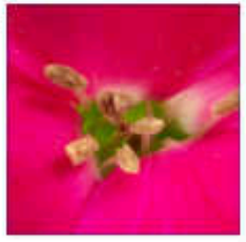



OPTIONAL LIGHT SOURCES:

LE.1973 Ringlight with 144 LEDs with adjustable light intensity. External power supply 100-240. Vac / 12 Vdc (50/60 Hz). With segment controller. Luminous flux of 23,000 Lux and color temperature of 6500 K

LE.1974 Ringlight with 72 LEDs with adjustable light intensity. External power supply 110-240 Vac / 12 Vdc (50/60 Hz). With segment controller. Luminous flux of 20,000 Lux and color temperature of 6500 K

LE.5207 Light source with 2x 3W LED light source mounted on two self-sustaining Gooseneck-type 56 cm long guide. Luminous flux 25.000 Lux, 6500K

LE.5212 Multiple light source station with

- two self-sustaining gooseneck-type 56 cm long guides with 2x 3 Watt white 6500 K power LEDs, each with a 3-lens focusing heads
- 60 LEDs ringlight, 6.500 K, 24.000 Lux
- transmitted 42 LEDs light stage, 6.500 K, 8.000 Lux. Stage diameter 94.5 mm, 15 mm thick



● *MZ.4600 with LE.1973*

how to match
camera resolution

In microscopy, the image of the sample under observation is projected by the optical components of the microscope (objective lenses, eyepiece lenses, intermediate lens or camera relay lenses) onto the surface of a camera sensor or the retina of a human eye

Not the total amount of pixels – which basically determines the field of view of the camera image - is primordial but a more important specification is the pixel size of the camera sensor. What might be astonishing to know about digital resolution of camera's is the fact, that the higher the magnification, the fewer pixels the chip of a camera needs!

To optimize the transfer of the details of the sample (resolving power) to the camera, the pixel size of the photodiodes of the camera sensor is a key element

EXAMPLE OF A 10X/0.25 OBJECTIVE WITH 1/2 INCH CAMERA SYSTEM

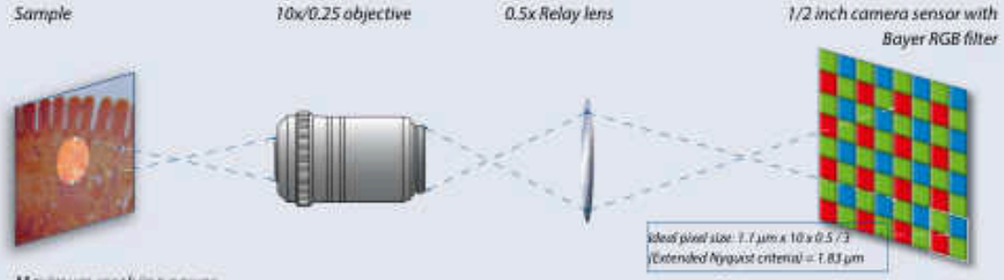

Maximum resolving power limit of a10x/0.25 objective is a 1.1 µm detail

Projected image is 1.1 µm x 10x x 0.5 = 5.5 µm

MAXIMUM AND OPTIMUM PIXEL SIZE REQUIREMENTS:

Obj. Magn.	NA	Resolving power[1] (µm)	Projected size (µm)	Projected size with 0.5x lens (µm)	Maximum [2] camera pixel size (µm)	Optimum [2] [3] camera pixel size (µm)
1x	(0.04)	6.90	6.90	3.45	1.72	1.15
2x	(0.06)	4.60	9.20	4.60	2.30	1.53
4x	(0.10)	2.80	11.2	5.60	2.80	1.86
10x	(0.25)	1.10	11.0	5.50	2.75	1.83
20x	(0.40)	0.69	13.8	6.90	3.45	2.30
40x	(0.65)	0.42	16.8	8.40	4.20	2.80
60x	(0.80)	0.34	20.4	10.2	5.10	2.40
100x	(1.25)	0.22	22.0	11.0	5.50	3.67

[1] *Resolving power of the objectives: r = 1.22 • λ / (NA Objective + NA Condenser). With NA = numerical aperture , λ = wavelength and r = optical resolving power. The resolving power limits are based on various theoretical calculations. Low specimen contrast, improper or low illumination conditions, etc, may serve to lower resolving power limits, more often than not, the real-maximum values are not realized in practice*

[2] *The Nyquist criterion states that the maximum camera pixel size can't exceed half of the resolving limit of the objective. For high resolution images, the Nyquist criterion is even extended to 2.5 to 3 pixels per detail and thus the optimum camera pixel size (3) is calculated as maximum 1/3 of the resolving limit of the objective*

[3] *Although smaller pixel size of photodiodes of the camera sensor improve the resolution, smaller pixel sizes lower signal to noise ratios, lower the dynamic range and collect less light! Binning techniques can compensate for lower signal to noise ratios*



MZ.4700(-HDS)

digital autofocus macrozoom 4K/1080p

The MZ.4700 is an integration of a 1080p HDMI camera, an electrically controlled continuous zoom auto-focus objective together with a stand and illumination system. The MZ.4700 enables direct inspection of objects on a HD screen. The mouse-driven built-in software controls the camera parameters and enables measurements on screen, capturing and saving .jpg or .bmp format pictures and .mp4 format video on a USB memory stick



● *MZ.4700-HDS*



● *MZ.4705*

product information

MZ.4700
360 (h) x 475 (w) x 250 mm (d) | 5.1 kg

HIGHLIGHTS

- **Stand-alone or PC operated**
- **Sony 1/2.8" 4K/1080P CMOS sensor**
- **18x optical zoom ratio**
- **Optical zoom factor up to 5.6x**
- **On-screen magnification from 2.8 to 47x**
- **205 - 215 mm Working distance**
- **Standard LED ringlight**
- **Optional directional LED ringlight**
- **Built-in mouse-driven software**
- **2 Years warranty**



● *MZ.4700 on an NZ.9047 stand*

● *MZ.4735*

● *MZ.4740*

SPECIFICATIONS

ZOOM OBJECTIVE

- The 16 elements objective has an 18x zoom ratio and produces magnifications up to 0.56 magnification with a manual or automatic focusing function
- Fields of view from 255 x 145 mm (1x zoom) to 14 x 8 mm (18x zoom)
- On-screen magnification 2.8 to 47x @190 mm WD (24" screen)
- Focusing range between 205 and 225 mm

WD = working distance

CAMERA

- The 8.3 MP camera is equipped with a Sony 1/2.8 inch 4K UHD/1080P CMOS high-definition sensor with high signal-to-noise ratio. This generates a 3840 x 8160 pixels video streaming, up to 60 images per second*
- The 4K/UHD signal fits the HDMI input of an HD screen
- A built-in SD card is used for image and video storage
- Stand-alone or PC operated (ImageFocus Alpha)

BUILT-IN SOFTWARE

The intuitive built-in software is controlled by the supplied - and to the camera connected - mouse. It features a camera-, an autofocus control panel and a measurement toolbar

ILLUMINATION

A standard LED ringlight assures a good lighting of the sample. A ringlight with 12x 1W, 30° directional LEDs enables extremely flexible lighting of the sample

STAND

- The MacroZoom can be mounted on a dedicated rack&pinion stand with or without a dedicated HD screen
- With the 30° directional 12x 1W LED ringlight (MZ. 4735,) the MacroZoom (MZ.4705) can also be mounted on the NexiusZoom stands (for instance, the NZ.9047, see dedicated datasheet on the website)

PACKAGE CONTENT

Supplied with a standard ringlight, a 32 GB SD card, mouse, WiFi dongle, HDMI cable and external 100-240 Vac / 12Vdc / 3A power supply

ORDER PRODUCT REFERENCES

MZ.4700	Stand-alone digital autofocus MacroZoom [1] with standard stand
MZ.4700-HDS	Stand-alone digital autofocus MacroZoom [1] with standard stand and HD screen
MZ.4705	Stand-alone digital autofocus MacroZoom [1,2]
MZ.4710	Standard stand for MZ.4705
MZ.4712	11 inch HD screen for MZ.4710 inclusive pillar attachment
MZ.4740	Standard LED ringlight
MZ.4735	Directional 12 x 1W LEDs ringlight

[1] Supplied with a 32 GB SD card, mouse, WiFi dongle, HDMI cable and External 100-240 Vac / 12Vdc / 3A power supply

[2] The MZ.4705 can also be mounted on NexiusZoom stands

** Frame rates were determined at optimal conditions*

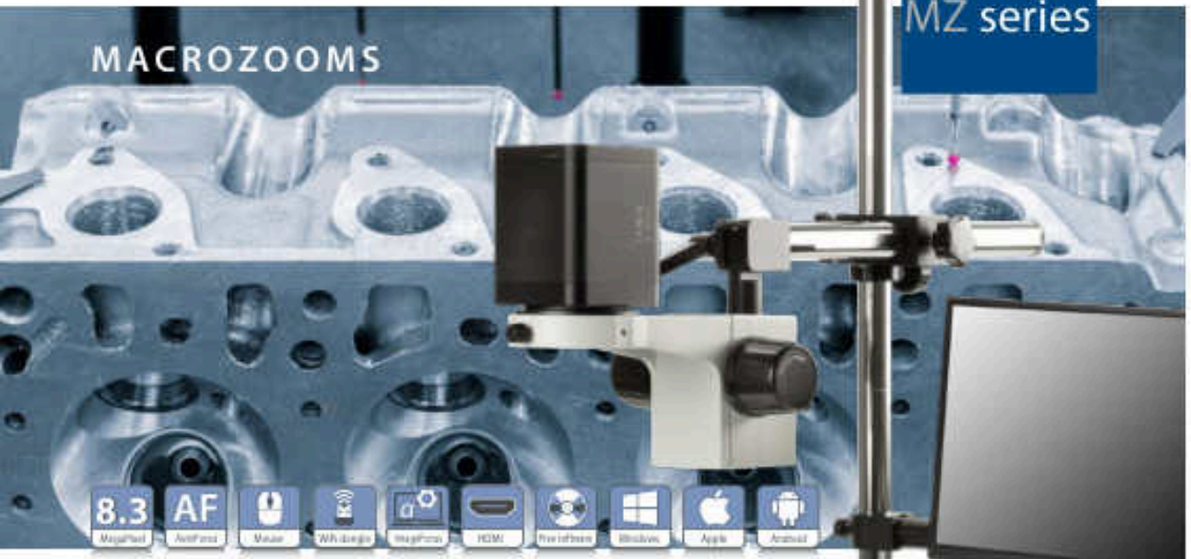

MZ.4702(-HDS)

Long WD AF macrozoom 4K/1080p

The MZ.4702 integrates a high-definition HDMI camera, an electrically controlled continuous zoom auto focus lens, along with a stable stand

● *MZ.4702-HDS*

Designed for direct inspection on an HD screen, the MZ.4702 allows effortless, real-time viewing with smooth 60 fps performance. Its built-in software provides full access to camera settings, on-screen measurement tools and the ability to capture and save images and videos

With an extended working distance and an ultra-wide field of view, the MZ.4702 delivers unmatched versatility and clarity for precision inspection tasks

product information

MZ.4702	675 (h) x 300 (w, base plate) 560 (w, all in) x 250 mm (d) | 4.6 kg

HIGHLIGHTS

- **Long working distance up to 67 cm**
- **Autofocus**
- **Stand-alone or PC operated**
- **Sony 8.3 CMOS sensor**
- **18x optical zoom ratio**
- **Auto or manual focus**
- **Great for QC or production sites**
- **400-670 mm extra-large working distance**
- **Built-in mouse-driven software**
- **1 Year warranty**



● *MZ.4707*

SPECIFICATIONS

ZOOM OBJECTIVE

- The 16 elements objective has a 18x zoom ratio with manual or automatic focusing function
- Fields of view from 65 x 37 cm (1x zoom) to 3.6 x 2 cm (18x zoom)
- On-screen magnification 0.8-14.5x @600 mm WD. (24" screen)
- Focusing range is between 400 and 670 mm

WD = working distance

PC/MAC SOFTWARE

Operates with ImageFocus Alpha imaging and measuring software for Windows 10 and higher (32 and 64 bit configurations) MacOS and Linux for a full range of image management tools

PACKAGE CONTENT

Supplied with a 32 GB SD card, mouse, WiFi dongle, HDMI cable and external 100-240 Vac / 12Vdc / 3A power supply

CAMERA

- The 8.3 MP camera is equipped with a Sony 1/2.8 inch 4K UHD/1080P CMOS high-definition sensor with high signal-to-noise ratio generating a 3840 x 2160 pixels video streaming up to 60 images per second
- The 4K/UHD signal fits the HDMI input of a HD screen
- Image and video storage is done on a built-in SD card or USB flash drive (not included)
- Stand-alone or PC operated (ImageFocus Alpha)

ILLUMINATION

For Illumination we recommend using Euromex LE.5207 or LE.5212

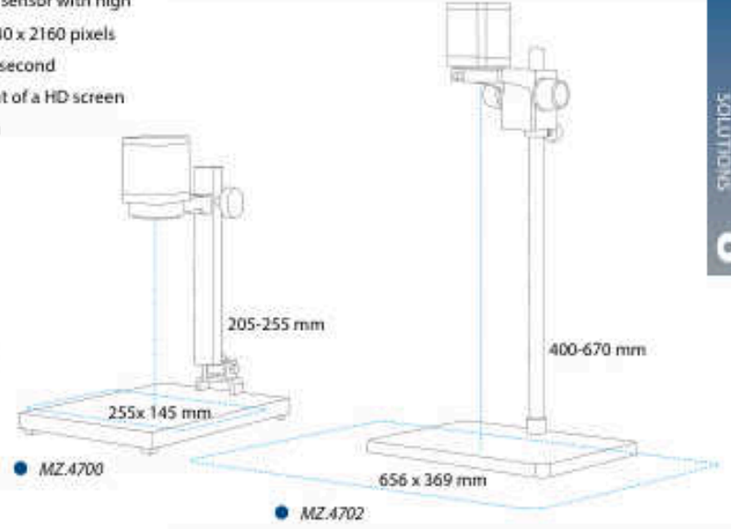

● *MZ.4700*

● *MZ.4702*

ORDER PRODUCT REFERENCES

MZ.4702 Stand-alone long working distance digital autofocus MacroZoom* with stand

MZ.4702-HDS Stand-alone long working distance digital autofocus MacroZoom* with stand and HD screen

MZ.4707 Stand-alone long working distance digital autofocus MacroZoom, camera only*

MZ.4714 Standard stand with camera holder for MZ.4702/4707

MZ.4716 11 inch HD screen for MZ.4702/4705, pillar attachment for MZ.4714 included

** Supplied with a 32 GB SD card, mouse, WiFi dongle, HDMI cable and power supply*

MZ.4707 can also be mounted on NexiusZoom stands such as NZ.9047

ACCESSORIES

LE.5207 Economical dual LED intensity adjustable light source with two 44 cm flexible gooseneck arms, each mounted with a 3 W LED

LE.5112 Light source station with multiple power supply connections for two self-sustaining gooseneck-type guides, one ringlight and one transmitted stage illumination. For stand-alone usage or mounted on stereo microscope pillar stands with diameters up to 44 mm or with 35- and 25-mm pole mounting adapter rings



● *LE.5207*

● *LE.5212*

STANDS

NZ.9025 Black articulated stand with table clamp (needs holder NZ.9081)

NZ.9027 Articulated arm stand with heavy stand (needs holder NZ.9081)

NZ.9081 76 mm holder for articulated arm stands NZ.9025 and NZ.9027

NZ.9030 Universal double-arm stand, needs holder (NZ.9090/9095)

NZ.9032 Universal double-arm stand with table clamp, needs holder (NZ/9090/9095)

NZ.9090 Holder, with coarse control suitable for NZ.9030/9032 stands

NZ.9095 Holder with fine coarse for NZ.9030/9032 stands

NZ.9047 Articulated stand with adjustable tilt, swivel and rotating functions. With desktop clamp for mounting on 10-85 mm tabletops. Can also be fixed on tables with drilled holes. Supplied with 76 mm holder



● *NZ.9047 in combination with MZ.4705/ MZ.4707*

how to keep the optics clean

PB.5275 cleaning kit

Dust and dirt particles have a negative affect on image quality. Keeping the optical system of your microscope clean is essential for the best image quality and overall life span of your microscope. Dust and dirt on optical elements such as lenses, prisms and filters that are left unattended can be become difficult - or even impossible - to remove and may cause mold

1

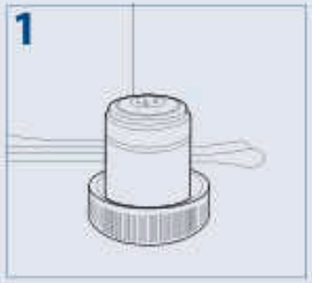

Place your objective or eyepiece on a secure location. One can use the objective's cap or eyepieces can be placed in the cut-outs within the storage box. Condensers and collector lenses can remain on the microscope

2



To prevent scratches on coatings and optical glass, first try to remove dirt and dust that sticks to the optical surface with an air-blower or pressurized dry air (oil-free and under moderate pressure version only)

3



Use an absorbent lens paper or cotton swap. Damp a swap or towel with a small amount of lens cleaning fluid or cleaning mixture (Either pure iso-propanol or a mixture of 7 parts ether and 3 parts alcohol)

4



Clean the lens by using the tip of the cotton swap or lens paper*. When cleaning a large lens surface, wipe with little pressure from the center towards the periphery in a circular motion, do not use zig-zag motion. Discard each lens paper or cotton swap after a single use

5



Wait until the cleaning fluid is evaporated, or speed up this process by using pressurized dry air

6

Check with the help of a magnifying glass if the surface is clean and place the cleaned item back on the nosepiece of the microscope



● *PB.5275*

** Use enough lens paper so that solvents do not dissolve oils from your hands which can make their way through the paper onto the coated surface*

PLEASE NOTE

that cleaning of the optical surfaces indicated in this instruction only applies to external surfaces of objectives, eyepieces, filters and condensers. Internal surfaces must always be done by your Euromex microscope distributor

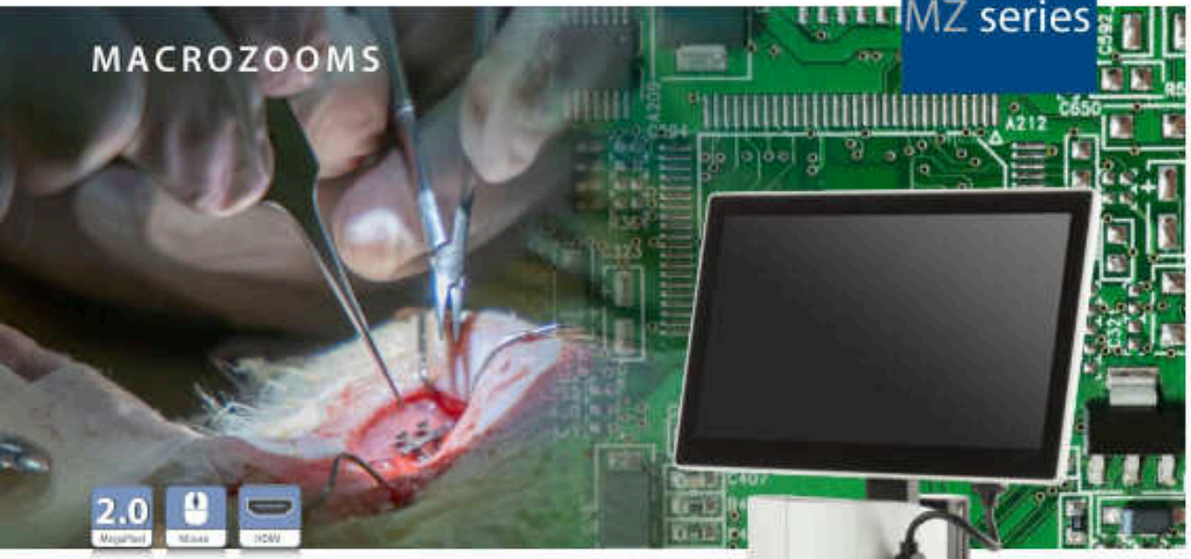

MZ.5000

digital macrozoom

The digital MacroZoom microscope is built around one 0.7 to 5x zoom objective and enables inspection of objects directly on an 11.6" LCD screen, -5° to 15° inclination. This kind of microscope is well-suited for inspection and quality control departments

The digital MacroZoom is equipped with a built-in full high-definition 1080p camera which can deliver up to 60 images per second and is connected either to the supplied and attached 11.6" screen or an external stand-alone HD screen



● *MZ.5000*

product information

MZ.5000

HIGHLIGHTS

- **MonoZoom stand-alone digital microscope**
- **Zoom from 0.7x up to 5x**
- **105 mm working distance**
- **110 mm working distance with 0.5x lens**
- **Built-in incident LED ringlight**
- **Built-in 1080p 2 MP HD camera**
- **HD 11.6 inch screen, -5° to 15°**
- **Built-in mouse driven on-screen software**
- **Conveniently build-in capture button**
- **Removable 32 GB memory stick**
- **Metal stand**
- **2 Years warranty**



● *Adjustable screen*

SPECIFICATIONS

CENTRAL ZOOM OBJECTIVE

The digital MacroZoom MZ.5000 features a single zoom objective with a 0.7 to 5x zoom magnification. Zoom adjustment engravings on 1, 1.5, 2, 3, 4 and 5x. The working distance is 105 mm. Supplied with a 0.5x additional lens with a working distance of 110 mm

STAND

The Central Zoom Objective with attached screen and LED ringlight is mounted on a rack and pinion system that sits on a large 320 x 260 mm metal stand. Travel range is 225 mm

ILLUMINATION

A supplied 5,500 K LED ringlight with 56 LED's can be mounted under the microscope body. The intensity is adjustable

BUILT-IN CAMERA

Built-in HD 1080p high-definition 2 MP CMOS high speed camera, 1920 x 1080 pixels, 60 fps* with attached 11.6 screen. The standard field of view is 29.8 to 4.18 and with the 0.5x additional lens from 59 to 8.35. The camera has one HDMI output that can be connected either to the attached screen or to an external HD screen

Two other USB ports accept the supplied 32 GB USB memory stick (up to 128 GB) and a supplied wireless mouse that drives the built-in on-screen software. The operator can also take and save images to the SD card by pressing on a capture button at the right side of microscope body

BUILT-IN SOFTWARE

The built-in on-screen software is mouse driven and features functions such as Capture image, Freeze image, Automatic white balance, Automatic exposition, File manager, Grids and camera settings such as exposure time, gain, saturation, contrast, sharpness, HDR

Measurement functions are also available from the software such as line, area, angle. Images are saved in .jpg format and videos are saved in .avi format. With the digital zoom function, objects can be observed with a magnification up to 70 times

PACKAGE CONTENT

Supplied with 32 GB memory stick, mouse, short HDMI cable for attached screen, external 100-240 Vac / 12Vdc / 3 A power supply

** Frame rates were determined at optimal conditions*

USB CAMERAS

CAMERA FOR EDUCATION AND LABORATORIES



CMEX USB-2.0 cameras

with fast CMOS sensor

The CMEX-2f, CMEX-5f and CMEX-12f are equipped with a fast CMOS sensor. The CMEX cameras are equipped with USB-2.0 data interface

Besides capturing images and videos, the ImageFocus Plus software allows measurements on still and live images and annotations on captured images. Compatible with Windows 10 and higher, both 32 and 64 bits configurations. A MacOS version is also available. Free software can be downloaded from our website

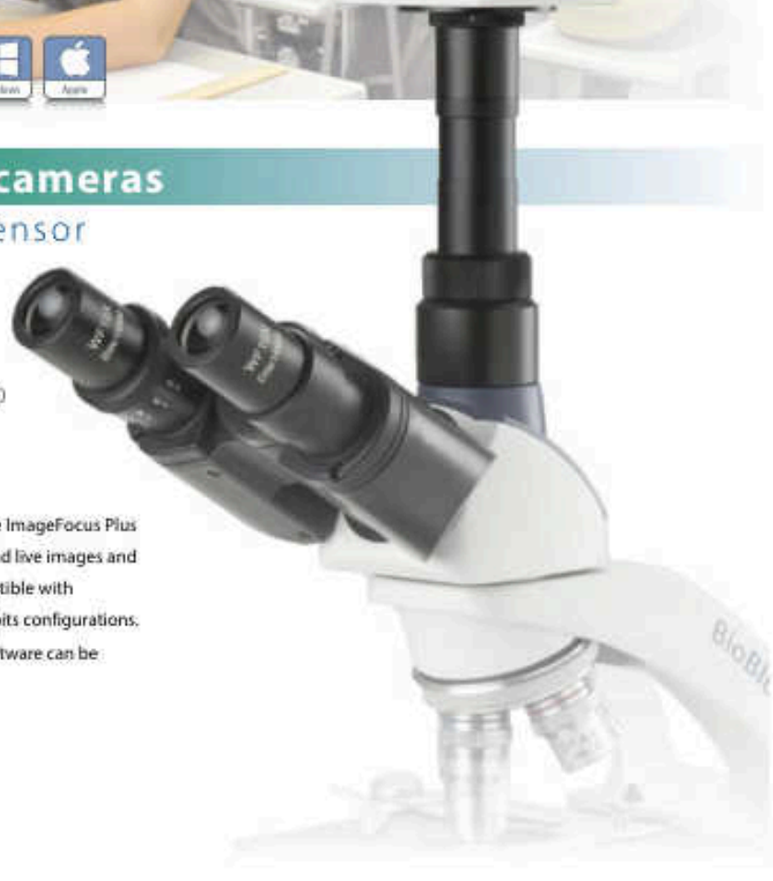

HIGHLIGHTS

- Entry level camera for amateurs, education and laboratories
- 2.0, 5.0 or 12.0 MP
- 1920 x 1080 - 4000 x 3000 pixels
- Color depth 24 bits
- Low signal/noise ratio
- USB 2.0 interface







MODELS	Sensor	Sensor size (inch)	Pixels size (µm)	Resolutions	Max. frames (p/sec)*	Grayscale conversion	Color rendering	Dynamic (dB)	Sensitivity V/lux-sec (at 550 nm)	Product number
CMEX-2f	2.0 CMOS	1/2.9"	2.8 x 2.8	1920 x 1080	30	8 bits	24 bits	72	0.51	DC.2000f
CMEX-5f	5.0 CMOS	1/2.8"	2.0 x 2.0	2560 x 1920 1600 x 1200	30 50	8 bits	24 bits	72	2.0	DC.5000f
CMEX-12f	12.0 CMOS	1/2.3"	1.33 x 1.33	4000 x 3000 2592 x 1944	15 30	8 bits	24 bits	60	1.5	DC.12000f

The CMEX cameras are supplied with USB-2.0 cable, 30.0 and 30.5 mm to 23.2 mm conversion adapters for use with stereo microscopes and a 1 mm/100 (10 µm/division) calibration slide. The cameras are supplied with a 0.45x C-mount objective
** Frame rates have been determined at optimal conditions*



● CMEX-20 Pro

Advanced CMEX USB-3.0 cameras

with CMOS sensor

The CMEX Pro cameras are equipped with a 5.1, 10 or 20 MP CMOS sensor with 12 bits grayscale conversion and a 24 bits color rendering. These cameras are equipped with a USB-3.0 data interface enabling fast frame rate

Besides capturing images and videos, the ImageFocus Alpha software allows measurements on still and live images and annotations on captured images. Compatible with Windows 10 and higher, both 32 and 64 bits configurations. A 2 GB RAM 2.8 GHz computer and 17 inch display is recommended. A MacOS version is available. Free software can be downloaded from our website

MODELS	Sensor	Sensor size (inch)	Pixels size (µm)	Exposure time	Resolutions	Max. frames (p/sec)*	Signal/ Noise (dB)	Dynamic (dB)	Sensitivity /lux-sec	Product number
CMEX-5 Pro	5.0 MP CMOS	1/2.5"	2.2 x 2.2	1 ms – 2000 ms	2592 x 1944 1296 x 972 640 x 486	16 50 98	39	68.	1.76 V	DC.5000-PRO
CMEX-10 Pro	10 MP CMOS	1/2.3"	1.67 x 1.67	1 ms – 2000 ms	3584 x 2746 1792 x 1372	8 25	35.5	63.5	0.31 V	DC.10000-PRO
CMEX-20 Pro	20 MP CMOS	1/1.8"	1.4 x 1.4	0.2 ms – 15 s	5120 x 3840 2560 x 1920	20 45	39.3	63.8	8.4 ke	DC.20000-PRO

The CMEX-5 Pro, -10 Pro and -20 Pro cameras are supplied with USB-3.0 cable, 30.0 and 30.5 mm adapters to use with stereo microscopes, 1 mm/100 (10 µm/division) calibration slide. The CMEX-5 Pro and -10 Pro are supplied with a 0.5x C-mount objective, the -20 Pro with a 0.75x C-mount objective

** Frame rates have been determined at optimal conditions*



● sCMEX

sCMEX USB-3.0 cameras

with scientific grade sCMOS sensor

These cameras are equipped with a scientific grade back illuminated Sony sCMOS sensor with 16 bits grayscale conversion and an outstanding 36 bits color rendering. Suitable for brightfield, darkfield and fluorescence. The cameras are equipped with a USB-3.0 data interface and supplied with ImageFocus Alpha software

Besides capturing images and videos, the ImageFocus Alpha software allows measurements on still and live images and annotations on captured images. Compatible with Windows 10 and higher, both 32 and 64 bits configurations. Also compatible with MacOS. PC requirements: Intel Core2 2.8 GHz or higher or equivalent, 2 GB memory, USB-3.0 port, 17 inch display. Free software can be downloaded from our website

MODELS	Sensor	Sensor size (inches)	Pixels size (µm)	Exposure time (ms)	Resolutions	Max. frames (p/sec)*	Color rendering	Dynamic range (dB)	S/N Ratio (dB)	Sensitivity V/lux-sec	Product number
sCMEX-6	6.3 MP sCMOS	1/1.8"	2.5 x 2.5	0.1 – 15,000	3072 x 2048 1536 x 1024	30 38	36 bits	66.8	44.51	0.15	DC.6000s
sCMEX-12	12 MP sCMOS	1/1.6"	2.0 x 2.0	0.013 – 15,000	3536 x 3536 1768 x 1768	27 60	36 bits	69.8	40.7	0.17	DC.12000s
sCMEX-20	20 MP sCMOS	1"	2.4 x 2.4	0.1 – 15,000	5440 x 3648 2736 x 1824 1824 x 1246	15 50 60	36 bits	66.3	44.74	0.21	DC.20000s
sCMEX-32	32 MP sCMOS	1.15"	2.3 x 2.3	0.1 – 15,000	5600 x 5600 2800 x 2800 1400 x 1400	8.1 30 30	36 bits	88	50	0.43	DC.32000s

The sCMEX cameras are supplied in a carton box with USB-2.0 cable, 30.0 and 30.5 mm to 23.2 mm conversion adapters for use with stereo microscopes, 1 mm/100 (10 µm/division) calibration slide. The DC.6000s is supplied with a 0.5x objective, the DC.12000s is supplied with a 0.75x objective and the DC.20000s and DC.32000s are supplied with a 1.0x adapter

** Frame rates have been determined at optimal conditions*



CMEX-5 WiFi-4

digital WiFi camera with 1/1.8 inch 4 MP CMOS sensor

The CMEX-5 WiFi-4 camera is equipped with a 4.0 MP Sony CMOS sensor with 12 bits grayscale conversion and a 24 bits color rendering and it can be used either through the USB data interface or through the WiFi interface

The CMEX camera streams H.264 encoded high resolution images simultaneously to several WiFi enabled smartphones, tablets or computers with iOS, Android or Windows operating systems

Power supply through USB charger or computer USB port. Standard C-mount mounting

Adding a WiFi camera to your microscope is ideal for wireless sharing/viewing of microscope images. Ideal for demonstrations where remote viewing is needed

Android app for this camera is available on www.euromex.com. IOS app can be downloaded from the App Store (free of charge). ImageFocus Alpha software can be used by means of WiFi on PC's and Macs and is available on www.euromex.com

The camera is powered by the included USB charger or a computers USB port. Standard 0.5x C-mount objective is included

MODEL	Sensor	Sensor size (inches)	Pixels size (µm)	Resolutions	Grayscale conversion	Color rendering	Signal/ Noise(dB)	Dynamic (dB)	Sensitivity V/ lux-1/30 s	Product number
CMEX-5 WiFi-4	4.0 MP CMOS	1/1.8"	2.9 x 2.9	2688 x 1512	12 bits	24 bits	44	48	921	DC.5000-WiFi-4

The CMEX-5 WiFi-3 camera is supplied in a box with USB cable, 30.0 and 30.5 mm adapters to use with stereo microscopes, and a 0,5x C-mount objective



● *DC.20000i and DC.6000i*

Cooled color camera

with CCD or CMOS sensor

The Euromex 6 and 20 Megapixel Peltier cooled cameras are equipped with Peltier cooling elements that allow the camera to be used for fluorescence and other low light applications. These advanced and premium models are supplied with a USB-3.0 interface

ImageFocus Alpha software has specific functions for fluorescence like combining capture fluorescence images. Furthermore it allows capturing of images and videos, doing measurements and annotations, generating reports, live image stitching etc. Compatible with Windows 10 and higher, both 32 and 64 bits configurations. Free software is available on www.euromex.com. A MacOS version is also available (with a few differences in features)

MODELS	Sensor	Sensor size (inches)	Pixel size (µm)	Resolutions	Max. frames (p/sec)*	USB-3	Dynamic range (dB)	S/N Ratio	Sensitivity @ 1/30 sec	Peltier cooling
DC.6000i	6.0 MP CCD	1"	4.54 x 4.54	2748 x 2200 2748 x 1092	7.5 14	•	62.34	41.6	880 mV	•
DC.20000i	20 CMOS	1"	2.4 x 2.4	5440 x 3648 4096 x 2160 2736 x 1824 1824 x 1216	5 10 15 30	•	66.3	41.74	462 mV	•

** Frame rates have been determined at optimal conditions*

HD AND HD-AUTOFOCUS CAMERAS



(Ultra) high-definition cameras

CMOS color cameras

These UHD-4K and HD cameras offer the perfect solution to modern microscopy where real-time images are needed. These HD image quality cameras can be used with biological, metallurgical or stereo microscopes

STAND-ALONE MODE

To use these cameras you do not need a computer or have any computer knowledge. Most camera settings are done automatically and therefore these cameras are very user- friendly. This results in faster, more flexible and compact working conditions. Simply connect the camera to a high-definition dedicated 11.6" or 13" HD screen, TV-HD or HD-beamer with a HDMI input and the system is ready to go. The mouse driven built-in software of the camera enables captured images and recorded videos to be saved on the integrated SD memory card

Almost all HD cameras offer a full range of measuring functions on live and captured images

COMPUTER CONTROLLED MODE

Users who want more camera controls and more functions can also connect the camera to a computer and benefit from the extensive functions of the Euromex ImageFocus software. It runs on Windows 10 and higher, both 32 and 64 bits. Besides extended camera settings, the software can save images in JPG, TIFF or BMP formats and record videos in .avi format on the hard disk of the computer. The software offers different measurement functions on live and captured images and also full control over the camera parameters

HIGHLIGHTS

- (Ultra) high-definition cameras
- Real-time images directly on TV, monitor or beamer
- Stand-alone or computer controlled mode
- Built-in mouse-driven software and SD memory card
- HDMI, USB-2.0/3.0
- GbE (Ethernet) (VC.3042)
- WiFi (VC.3042 and VC.3034)
- Autofocus model available
- Compatible with ImageFocus software



VC.3036-HDS on stereo microscope



VC.3034-HDS on the BioBlue

PACKAGE CONTENT*

MODELS	HD-Mini 2.0 MP	HD-Lite 5.0 MP	HD-Pro 8.0 MP	HD-Ultra 6.0 MP	UHD-4K Touch 8.0 MP	UHD-4K 8.3 MP	UHD-4K-16 16 MP
C-mount with objective	0.37x	0.45x	0.37x	0.37x	0.5x	0.5x	1x
30 and 30.5 mm adapters	•	•	•	•	•	•	•
SD card	32 GB	16 GB	32 GB	16 GB	32 GB	32 GB	32 GB
Calibration slide 10mm/100	•	•	•	•	•	•	•
External power supply	12V 1A	12V 2A	12V 1A	12V 2A	12V 2A	12V 1A	12V 1A
Dimensions (w x d x h)	51ø x 60 50 x 50 x 60	80 x 70 x 90	81 x 65 x 78	80 x 70 x 90	88 x 78 x 65	88 x 78 x 65	88 x 78 x 65
Product number	VC.3023	VC.3031	VC.3039	VC.3036	VC.3043	VC.3045	VC.3048
With HD screen	13" VC.3024-HDS	11.6" VC.3031-HDS	13" VC.3039-HDS	11.6" VC.3036-HDS	13" Touch VC.3043-HDS	13" VC.3045-HDS	13" VC.3048-HDS

ALL HD-CAMERAS

MODELS	HD-Mini	HD-Lite	HD-Pro HDMI	HD-Ultra	UHD-4K Touch	UHD-4K	UHD-4K-16
Sensor	Sony	Sony	Sony	Sony	Sony 4K	Sony 4K	Sony 4K
Format	1/2.8", HDTV 1080p	1/2.8", HDTV 1080p	1/2.8", HDTV 1080p	1/2.8", HDTV 1080p	1/1.8", HDTV 4K	1/1.8", HDTV 4K	1/1.1", HDTV 4K
Resolution*	1920 x 1080 [1,2] 60 fps*	2592 x 1944 [1] 1920 x 1080 [2] 15 fps*	3840 x 2160 [1] 1920 x 1080 [2] 26-60 fps*	3264 x 1836 [1] 1920 x 1080 [2] 30-60 fps*	3840 x 2160 [1,2] 20-30 fps*	3840 x 2160 [1,2] 30-60 fps*	5440 x 3060 [1] 5440 x 3060 (USB 3.0) [2] 20-30 fps*
Pixel size	2.9 x 2.9 (µm)	2.0 x 2.0 (µm)	1.45 x 1.45 (µm)	2.8 x 2.8 (µm)	2.0 x 2.0 (µm)	2.0 x 2.0 (µm)	2.4 x 2.4 (µm)
Video output	HDMI	HDMI, USB-2.0	HDMI, USB-C	HDMI, USB-2.0	HDMI, USB-2.0	HDMI, USB-3.0[3], Ethernet, WiFi	HDMI, USB-3.0[3], Ethernet, WiFi
Exposure	Automatic/ manual	Automatic/ manual	Automatic/ manual	Automatic/ manual	Automatic/ manual	Automatic/ manual	Automatic/ manual
White balance	Automatic/ manual	Automatic/ manual	Automatic/ manual/ROI	Automatic/ manual	Automatic/ manual/ROI	Automatic/ manual/ROI	Automatic/ manual/ROI
Sensitivity lux-sec	1300 mV	1000 mV	300 mV (1/30s)	510 mV	505 mV	3541 mV with 1/30 s	1847 mV with 1/30 s
Color rendering	12 bits	24 bits	24 bits	36 bits	32 bits	36 bits	36 bits
Signal/Noise (db)	42	40.5	38	55	40.5	40.5	40.6
Dynamic (db)	69	60	66	69	60	60	48
Interface	HDMI	HDMI, USB-2	HDMI, USB-C	HDMI, USB-2	HDMI, USB-2	HDMI, USB-3 [3], Ethernet, WiFi	HDMI, USB-3 [3], Ethernet, WiFi
Camera buttons	- -	on/off	on/off	on/off	on/off	on/off	on/off
Mounting	C-mount	C-mount	C-mount	C-mount	C-mount	C-mount	C-mount
Storage	32 GB SD card (max.128 GB)	16 GB SD card (max. 32 GB)	32 GB SD card (max. 128 GB)	16 GB SD card (max. 32 GB)	32 GB SD card (or USB drive)	32 GB SD card (or USB drive)	32 GB SD card (or USB drive)
Software	- -	ImageFocus Plus	ImageFocus Alpha	ImageFocus Plus	ImageFocus Alpha	ImageFocus Alpha	ImageFocus Alpha
Software languages	- -	13 [3]	15 [4]	13 [3]	15 [4]	15 [4]	15 [4]
External power supply	100-240 Vac to 12Vdc/1A	100-240 Vac to 12Vdc/2A	100-240 Vac to 12Vdc/2A	100-240 Vac to 12Vdc/2A	100-240 Vac to 12Vdc/2A	100-240 Vac to 12Vdc/1A	100-240 Vac to 12Vdc/1A
Relative humidity	30 - 80 %	45 - 85 %	30 - 80%	45 - 85 %	30 - 80 %	30 - 80 %	30 - 80 %
Temperature Operation Storage	-10 - 50° C -20 - 60° C	0 - 60° C -20 - 70° C	-10 - 50° C -20°C - 60° C	0 - 60° C -20 - 70° C	-10 - 50° C -20 - 60° C	-10 - 50° C -20 - 60° C	-10 - 50° C -20 - 60° C
Compatible	- -	Win 10 + higher MacOS	Win 10 + higher MacOS, Linux	Win 10 + higher MacOS	Win 10 + higher MacOS, Linux	Win 10 + higher MacOS, Linux	Win 10 + higher MacOS, Linux
Product number	**VC.3023 VC.3024-HDS [4]**	**VC.3031 VC.3031-HDS [4]**	**VC.3039 VC.3039-HDS [4]**	**VC.3036 VC.3036-HDS [4]**	**VC.3043-HDS Touch [4]**	**VC.3045 VC.3045-HDS [4]**	**VC.3048 VC.3048-HDS**

** Frame rates depend on resolution and output mode and have been determined at optimal conditions*
[1] capture mode (resolution depends on output mode)
[2] live view (resolution depends on output mode)
[3] USB-2.0 compatible but limitations in speed and resolution
[4] model with attached HD screen, 1080p

[3] English, Chinese Simplified, Traditional Chinese, Thai, German, Italian, French, Korean, Japanese, Russian, Polish and portugese
[4] English, Catalan, Indonesian, Polish, Chinese Simplified, Traditional Chinese, Thai, German, Italian, French, Korean, Japanese, Russian, Turkish, Spanish

BUILT-IN SOFTWARE FEATURES (HDMI MODE)

MODELS	HD-Mini	HD-Lite	HD-Pro HDMI	HD-Ultra	UHD-4K Touch	UHD-4K	UHD-4K-16
Image capturing (JPEG)	1920 x 1080	2592 x 1944	3840 x 2160	3261 x 1840	3840 x 2160	3840 x 2160	5440 x 3060
Video recording	1920 x 1080 MP4	1920 x 1080 AVI	1920 x 1080 MP4	1920 x 1080 AVI	3840 x 2160 MP4	3840 x 2160 MP4	3840 x 2160 MP4
Browse saved images	•	•	•	•	•	•	•
Browse saved video's	•	•	•	•	•	•	•
Mouse driven	•	•	•	•	•	•	•
Auto exposure	•	•	•	•	•	•	•
Exposure time	0.01 – 1000 ms	0.001s – 10 s	0.04 – 1000 ms	0.001s – 10 s	0.04 – 1000 ms	0.04 – 1000 ms	0.04 – 1000 ms
Gain	•	•	•	•	•	•	•
RGB & white balance	•	•	•	•	•	•	•
Gamma	•	•	•	•	•	•	•
Sharpness	•	•	•	•	•	•	•
Noise reduction	3D algorithm	3D algorithm	3D algorithm	3D algorithm	standard noise reduction	3D algorithm	3D algorithm
Saturation & contrast	•	•	•	•	•	•	•
Horiz. & vert. flip	•	•	•	•	•	•	•
Grids	multi	multi	User defined	cross/multi	cross/multi	cross/multi	cross/multi
Autofocus	- -	- -	- -	- -	- -	- -	- -
Compare function	- -	•	•	•	•	•	•
Measurement functions	captured & live images	- -	captured & live images	captured & live images	captured & live images	captured & live images	captured & live images
Line & free curve	- -	- -	•	•	•	•	
Polygon & rectangle	- -	- -	•	•	•	•	
Angle	- -	- -	•	•	•	•	
Circle 3 points	- -	- -	•	•	•	•	
Circle radius	- -	- -	•	•	•	•	
Export function	- -	- -	CSV	CSV, Txt	CSV	CSV	CSV
Languages	10 [3]	9 [3]	10 [3]	9 [3]	10 [3]	10 [3]	10 [3]
Product number	**VC.3023 VC.3024-HDS [4]**	**VC.3031 VC.3031-HDS**	**VC.3039 VC.3039-HDS**	**VC.3036 VC.3036-HDS**	**VC.3043 VC.3043-HDS Touch**	**VC.3045 VC.3045-HDS**	**VC.3048 VC.3048-HDS**

HDMI mode
[3] English, Chinese Simplified, Traditional Chinese, German, Italian, French, Korean, Japanese, Spanish
[4] English, Chinese Simplified, Traditional Chinese, Thai, German, Italian, French, Korean, Japanese, Russian



LaboPad

Discover the LaboPad – a versatile **tablet microscope camera system** that can easily be mounted onto your microscope. Capture stunning images and videos, then edit and analyze them with powerful ImageFocus software. The LaboPad can be detached for use as a regular tablet, offering flexibility in and out of the lab. An optional attachable keyboard adds even more functionality, making it the perfect all-in-one solution for modern microscopy





- *LaboPad, detachable, take it anywhere*

HIGHLIGHTS

- **12.1" Tablet with microscope camera**
- **2160 x 1440 pixels touch screen**
- **Windows 11**
- **ImageFocus Plus software for PC**
- **IF Alpha for WiFi enabled PC, Android and iOS devices**
- **Tablet can be fully detached from camera**
- **Optional keyboard**

SPECIFICATIONS

Processor	Quad Core max 3.3 GHz HD graphics processor
Screen	12.1 inch IPS 2160*1440 / 3:2
Memory	12 GB
Storage	512 GB Flash HDD, micro SD/SDHC slot for cards up to 64 GB
Webcam	2 MP front and 5MP rear camera
Connectivity	2x USB-C, WiFi 6 and Bluetooth 4.0
Audio	Stereo with 3.5 mm audio jack, internal microphone and speaker
Battery	Lithium, 38Wh, 5000mA
Weight	0.8 KG (tablet) 4.8 kg (complete)
System	Windows 11
Software	ImageFocus Plus or -Alpha, depending on version

Specifications can be changed by Euromex microscopen bv without notice.
Consult website to check latest specifications

product information

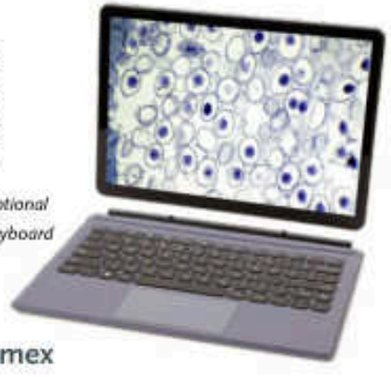

- *LP.1000, optional click-on keyboard*

SOFTWARE

LaboPad USB camera works with ImageFocus Plus software and LaboPad with WiFi camera works with ImageFocus Alpha. The WiFi camera can also be operated using IOS or Android apps

MODELS	Camera (MP)	Sensor size	Resolution	Pixels size (µm)	ADC	Color rendering	Dynamic (dB)	Sensitivity	Software	Product number
LaboPad-2	2.1	1/2.9"	1920 x 1080	2.8 x 2.8	12 bits	24 bits	--	0.51 V/lux-sec	IF Plus	LP.2000f
LaboPad-5	5.1	1/2.8"	2592 x 1920	2.0 x 2.0	12 bits	24 bits	72 dB	2.0 V/lux-sec	IF Plus	LP.5000f
LaboPad-12	12.0	1/2.3"	4072 x 3176	1.33 x 1.33	8 bits	24 bits	60 dB	1.5 V/lux-sec	IF Plus	LP.12000f
LaboPad-WiFi	4	1/1.8"	2688 x1512	2.9 x 2.9	12 bits	24 bits	48 dB	0.9 V/lux-1/30 sec	IF Alpha	LP.5000-WiFi

All LaboPads have ImageFocus preinstalled
The WiFi model connects to the pad via USB or WiFi, but allows use of the ImageFocus apps (IOS/Android)
All LaboPad models are supplied with a C-mount objective that fits the standard 23.2 mm trinocular tubes

SOFTWARE

The software is compatible with all cameras mentioned in table below. Besides live imaging the software captures images in various formats and video in .avi format

IMAGE FOCUS 4
DC.1300c

IMAGE FOCUS PLUS	
VC.3031(-HDS)	DC.2000f
VC.3036(-HDS)	DC.5000f
	DC.12000f

IMAGE FOCUS ALPHA	
MZ.4700(-HDS)	DC.5000-WiFi-4
MZ.4702(-HDS)	DC.6000i
	DC.20000i
VC.3039(-HDS)	DC.6000s
VC.3043-(HDS)	DC.12000s
VC.3045-(HDS)	DC.20000s
VC.3048-(HDS)	DC.5000-Pro
	DC.10000-Pro
	DC.20000-Pro
	DC.32000-PRO

IMAGE STITCHING

Image stitching is the process of combining multiple images with overlapping fields of view to produce one image

EXTENDED DEPTH OF FOCUS

"The extended depth of focus" function in the ImageFocus Alpha software or "stacking software, allows to combine a number of digital images of a object, focused at different focus planes, into one final image with much greater depth of field (see illustration below)






FREE UPDATES AVAILABLE ON EUROMEX.COM

ImageFocus Plus

software

ImageFocus Plus has a wide range of functions:
Measurements on still and live image
Extended depth of focus and stitching on still and live image (only with VC.3036 and VC.3031 cameras)
Images can be saved in .jpg, .tif, .bmp or .dicom formats as well as .avi and mpeg-4 format videos
The brightness, contrast and saturation of captured images can be adjusted
Camera parameters for exposure time, white balance and color control are easily accessible
The software also has specific functions for fluorescence such as combining captured fluorescence images
Compatible with Windows 10 and higher, both 32 and 64 bits configuration. A MacOS version is also available
PC requirements: Intel Core2 2.8 GHz or higher or equivalent, 2 GB memory or more, 17" screen

ImageFocus Plus software features English, German, French, Dutch, Spanish and Russian


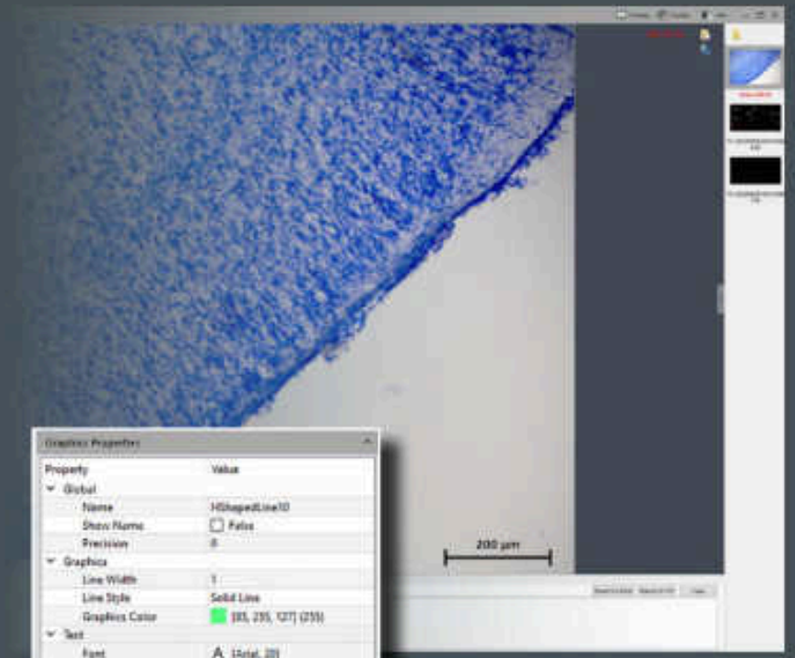




8 DIGITAL SOLUTIONS

ImageFocus Alpha
software

ImageFocus Alpha has a wide range of functions:

- Measuring, segmentation & counting, stichting of images, extended depth of focus, etc
- Images can be saved in .jpg, .tif, .bmp or .dicom formats as well as .avi format videos
- The brightness, contrast and saturation of captured images can be adjusted
- Camera parameters for exposure time, white balance and color control are easily accessible
- The software also has specific functions for fluorescence such as combining captured fluorescence images
- Compatible with Windows 10 and higher, both 32 and 64 bits configuration. A MacOS version is also supplied (with a few differences in features)
- PC requirements: Intel Core2 2.8 GHz or higher or equivalent, 2GB memory or more, 17" screen

One language can be selected during initial installation of the ImageFocus Alpha software English, Catalan, French, German, Indonesian, Italian, Japanese, Korean, Polish, Russian, Simplified Chinese, Spanish, Thai, Traditional Chinese, Turkish

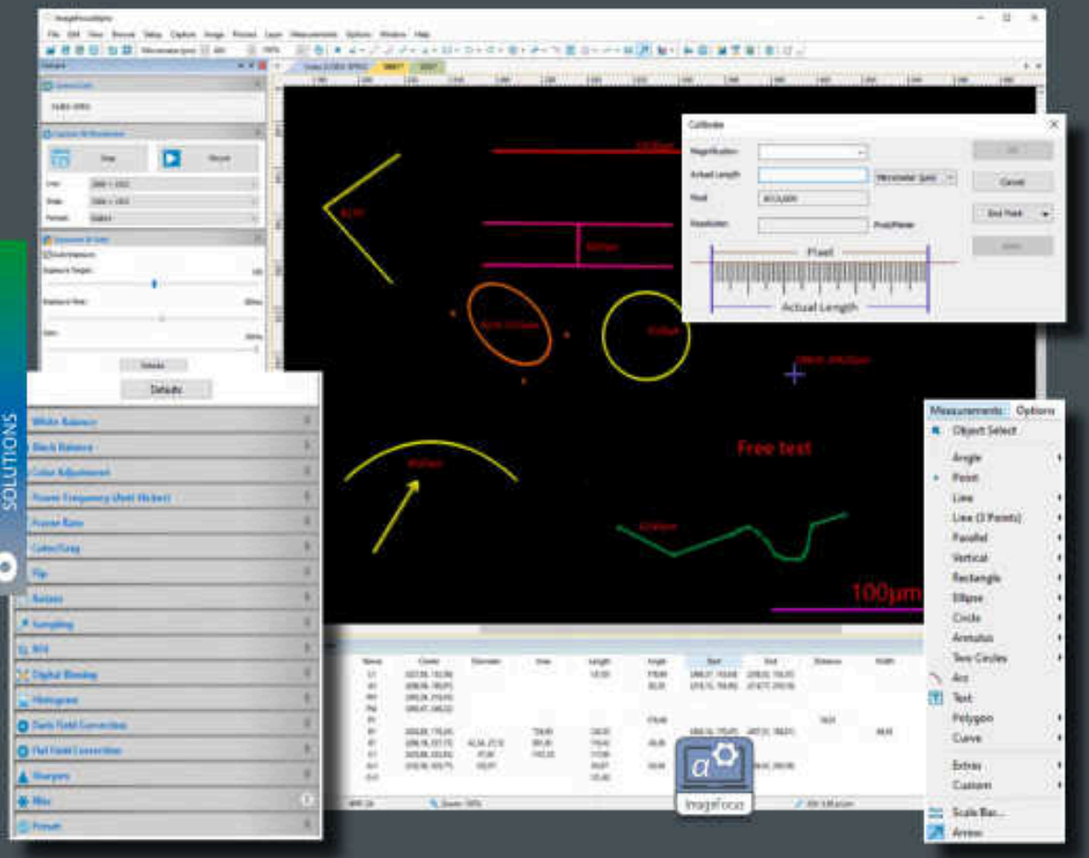

ImageFocus 4
software

ImageFocus 4 has a wide range of functions:

- Measurements can be done on still and live image
- Images can be saved in .jpg, .tif, .or .bmp formats as well as .avi format videos
- The brightness, contrast and saturation of captured images can be adjusted
- Camera parameters for exposure time, white balance and color control are easily accessible
- The software also has specific functions for fluorescence such as combining captured fluorescence images
- Compatible with Windows 10 and higher, both 32 and 64 bits configuration. A MacOS Light version is also available for capturing images*
- PC requirements: Intel Core2 2.8 GHz or higher or equivalent, 2GB memory or more, 17" screen

** Mac version not available for VC Series*

One language can be selected during initial installation of the ImageFocus 4 software: English, German, French, Dutch, Spanish and Russian

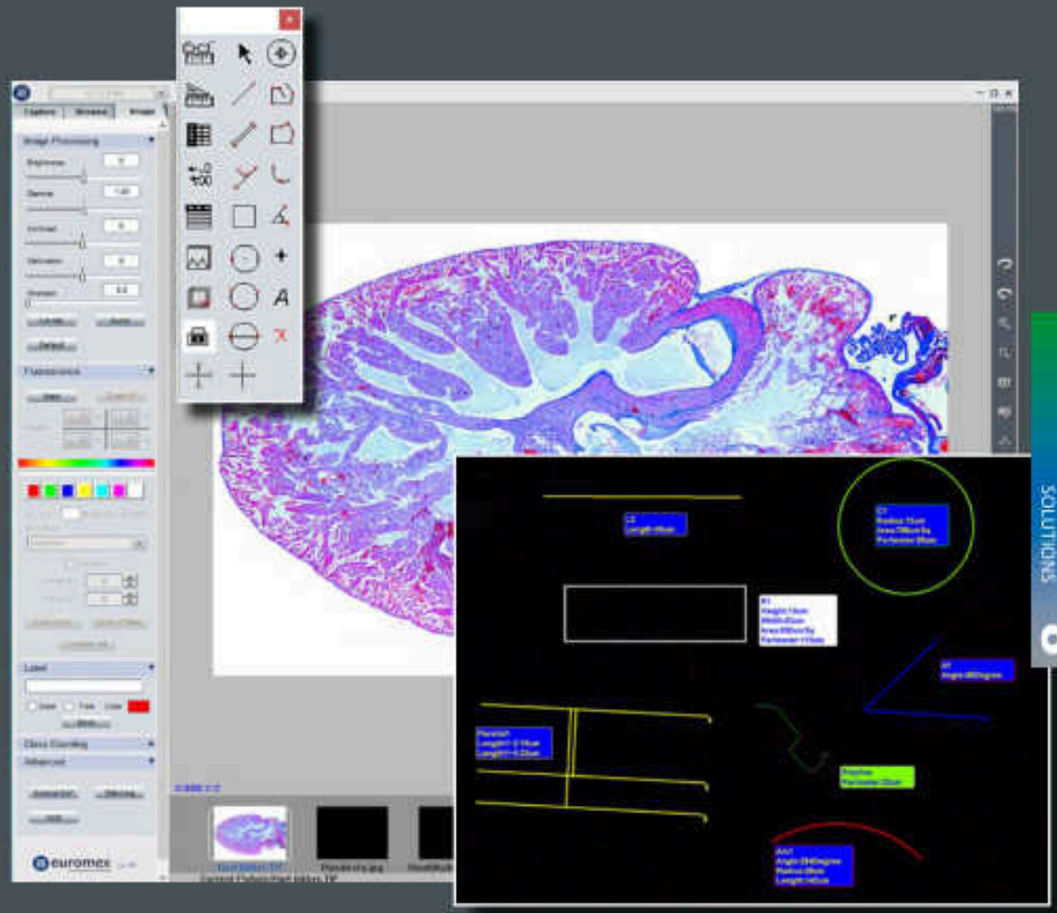

ImageFocusLabs

software for materials science

ImageFocusLabs is specifically designed to support your daily microscopy routines, micro-imaging and microstructure analysis. With an intuitive and user-friendly interface, the software streamlines your quality control procedures, improving both accuracy and consistency

Easy to use control panels guide you step-by-step through each analysis, removing guesswork and ensuring reliable, repeatable results

TWO EDITIONS – SCALABLE TO YOUR NEEDS

ImageFocusLabs is available in two versions. These two options ensure a tailored solution for every laboratory.
Software is supplied on a encrypted, licensed USB-dongle.

ImageFocusLab Grain size:
Includes Image capture +
Manual and Auto Measurements tools
Manual Count, Annotations
ASTM Grain Size analysis as per ASTM E112
Product number: SW.1051-G

ImageFocusLab Cast iron size:
Includes Image capture +
Manual and Auto Measurements tools
Manual Count, Annotations
Cast Iron analysis as per ASTM A247
Product number: SW.1051-C

OPTIMIZED FOR EUROMEX MICROSCOPY SYSTEMS

ImageFocusLabs is engineered for seamless integration with Euromex CMEX-PRO and sCMEX cameras, as well as the full range of Euromex metallurgical and stereo microscopes. With this perfect synergy between hardware and software, Euromex delivers a complete turnkey solution for high-performance metallurgical analysis and documentation

Key features

CUSTOMIZED REPORTING & USER SUPPORT

- Automatically compiled report sheets for all measurements according to industry standards
- Easy export to Excel
- Add your company logo, calibration scale, annotation text and arrows
- Save images with measurement overlays
- Access the built-in user manual with one click

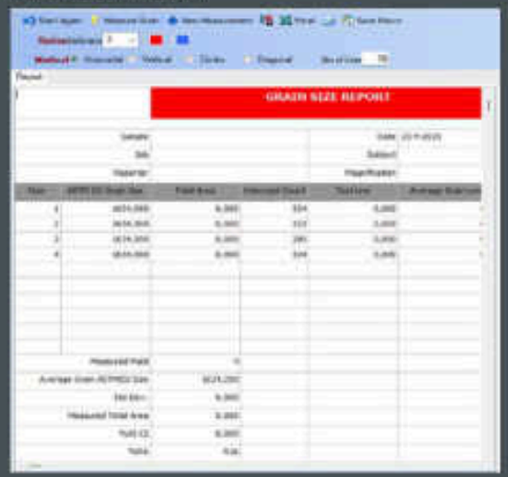

Grain size analysis

Grain boundaries are detected automatically
Calculates grain size using:

- Horizontal, vertical, diagonal and circular intercept methods
- ASTM Grain Size Number (G value)
- 95% Confidence Interval and Relative Accuracy (RA)
- Comprehensive reporting included

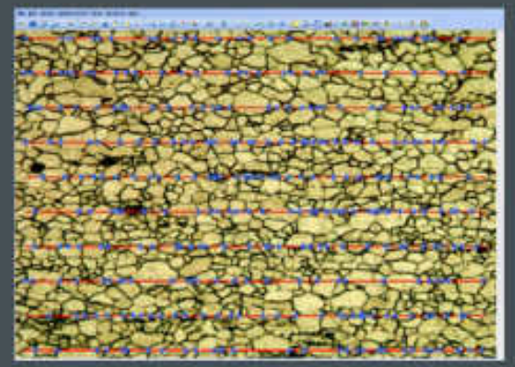

Cast iron size analysis

NODULARITY ANALYSIS

Conforms to ASTM A247, automatically measures graphite percentage, nodule density per mm², nodularity by area and count, classification and color-coding from class 1 to 8, ferrite and pearlite matrix percentages
Results are automatically compiled into a clear, structured report with multi-image statistics

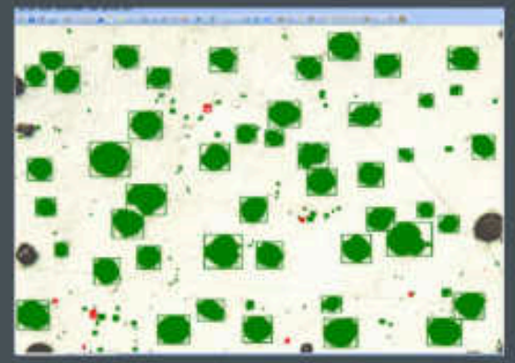

PHASE ANALYSIS (%)

Segment and quantify metallurgical phases like Ferrite, Pearlite and Graphite using threshold-based selection.

SPHERICITY

Calculates the percentage of round (spheritized) graphite particles. (based on ASTM A247)
Adjustable shape factor (default 0.6), counts spherical and non-spherical particles, includes pore/particle size distribution tables and color-coded classifications



PARTICLE SIZE & PORE ANALYSIS

Detect and measure micro-objects or pores, categorize by radius and diameter and export full results to Excel

GRAY IRON & FLAKE ANALYSIS

Analyzes and classifies graphite flakes:
Measures flake length and class
Calculates average % graphite, Ferrite and Pearlite
All data integrated into a single report



DIGITAL SOLUTIONS 8

ADAPTERS

FOR ALL MICROSCOPE CAMERAS



● AE.5130

● NZ.9850

adapter guide

microscope and camera

Most Euromex cameras are supplied with a photo port C-mount adapterto connect it to any Euromex trinocular microscope*. Monocular microscopes require the removal of the eyepiece so that the camera can be fitted into the 23.2 mm tube. Binocular microscopes require the removal of an eyepiece plus an additional mechanical adapter. To connect our cameras to another microscope brand, see adapter references below:

** Except for the Oxion, Oxion Inverso and Delphi-X Inverso series. They need an additional adapter. See next page*

MODELS	1/3 inch camera	1/2 inch camera	2/3 inch camera	1 inch camera
Leica [1]	AE.9835-L (0.35x)	AE.9855-L (0.55x)	AE.9870-L (0.70x)	AE.9810-L (1x)
Olympus [2]	AE.9835-O (0.35x)	AE.9850-O (0.50x)	AE.9863-O (0.63x) AE.9880-O (0.80x)	AE.9810-O (1x)
Zeiss [3]	AE.9835-Z (0.35x)	AE.9850-Z (0.50x)	AE.9865-Z (0.65x) AE.9880-Z (0.80x)	AE.9810-Z (1x)
Zeiss PrimoStar 3 [4]	AE.9835-ZP3 (0.35x)	AE.9850-ZP3 (0.50x)	AE.9865-ZP3 (0.65x)	AE.9810-ZP3 (1x)
Zeiss ZA [5]	--	AE.9850-ZA (0.50x)	AE.9863-ZA (0.63x) AE.9880-ZA (0.80x)	AE.9810-ZA (1x) AE.9812-ZA (1.2x)
Nikon [6]	AE.9835-N (0.35x)	AE.9855-N (0.55x)	AE.9870-N (0.70x) AE.9880-N (0.80x)	AE.9810-N (1x)

[1] Leica DM, 35 mm to 25.4 mm C-mount, stainless steel
[2] Olympus CX, CX2, BX, BX2, IX, MX, GX, SZX, STM, 42 mm to 25.4 mm C-mount, anodized aluminum
[3] Zeiss PrimoStar, PrimoStar Vert, 30 mm to 25.4 mm C-mount, anodized aluminum
[4] Zeiss PrimoStar, C-mount, anodized aluminum
[5] Zeiss 60N-C, 60N-T2 photo ports of Axio examiner, Axio Imager, Axio Lab, Axio Observer, Axio Scope, Axio Zoom, Stemy 508 and SteREO Discovery
[6] Nikon E100, E200, 50i, 55i, 80i, 90i, Ni series, Ti Series, SMZ800,SMZ1000, SMZ15000, 38 mm to 25.4 mm C-mount, stainless steel
Standard C-Mount: 25.4 mm (1 inch) diameter with 32 threads per inch



● AE.9835-L

23.2 MM PHOTO PORT C-MOUNT ADAPTERS

Suitable for all Ø 23.2 mm (photo) tubes

DC.1324 C-mount adapter with 0.45x objective for 1/2" camera
DC.1353 C-mount adapter with 0.37x objective, fixed focal length and short barrel*. For 1/3" camera
DC.1355 C-mount adapter with 0.50x objective, fixed focal length and short barrel*. For 1/2" camera
DC.1357 C-mount adapter with 0.75x objective, fixed focal length and short barrel*. For 2/3" camera
DC.1359 C-mount adapter with 1x lens, fixed focal length and short barrel, for standard 23.2 mm tube and 1" camera
DC.1330 30 mm to 23.2 mm conversion adapters
DC.1335 30.5 mm to 23.2 mm conversion adapters

** for increased light efficiency*



● DC.1355 ● DC.1330 / DC.1335 ● DC.1324



● AE.5130 ● AE.5120-2

PHOTO PORT ADAPTERS

Suitable for Euromex microscopes with a photo port such as Achios-X Observer, Achios-X Inverso, Oxion Inverso, NexiusZoom, StereoBlue, Delphi-X Observer and Delphi-X Inverso

Achios-X Observer

AX.9850 C-mount adapter 0.5x (standard included)
AX.9810 C-mount adapter 1x

Achios-X Inverso, AI.1053 and AI.3153 models

AI.9810-3 C-mount photo adapter 1x
AI.9850-3 C-mount photo adapter 0.5x

Achios-X Inverso, AI.4058 and AI.4158 models

AI.9810-4 C-mount photo Adapter 1x
AI.9870-4 C-mount photo Adapter 0.7x
AI.9850-4 C-mount photo Adapter 0.5x

bScope materials BS.40XX models

BS.9810 C-mount with 1x magnification for 1 inch sensor cameras
BS.9850 C-mount with 0.5x magnification for 1/2 inch sensor cameras
BS.9865 C-mount with 0.65x magnification for 2/3 inch sensor cameras

Delphi-X Inverso

DI.9840 C-mount with high resolution 0.40x objective for 1/3 inch C-mount camera
DI.9850 C-mount with high resolution 0.50x objective for 1/2 inch C-mount camera
DI.9810 C-mount with 1x magnification for C-mount camera

Delphi-X Observer

DX.9835 C-mount with high resolution relay 0.35x objective for 1/3 inch C-mount camera
DX.9850 C-mount with high resolution relay 0.50x objective for 1/2 inch C-mount camera
DX.9863 C-mount with high resolution relay 0,63x objective for 2/3 inch C-mount camera
DX.9810 C-mount with 1 magnification for C-mount camera

Oxion Inverso

OX.9810 C-mount adapter with 1x magnification for 1" cameras
OX.9833 C-mount adapter with 0.33x objective for Oxion microscopes and 1/3" cameras
OX.9850 C-mount adapter with 0.5x objective for Oxion and Oxion Inverso microscopes and 1/2" cameras

NexiusZoom

NZ.9850 C-mount adapter with 0.5x objective for NexiusZoom microscopes and 1/2" cameras

StereoBlue

SB.9850 C-mount adapter with 0.5x objective for StereoBlue microscopes and 1/2" cameras



accessories

accessories

for microscopy



product information

ILLUMINATION SOLUTIONS • 362
DISSECTION INSTRUMENTS & KITS • 370
MICROSCOPE PREPARED SLIDES • 374
MICROSCOPE SLIDES PROFESSIONAL • 386
DISPOSABLES • 392
STAINS • 393

LE.1975

FEATURED



LE.1975

Discover the LE.1975, a polarizing LED ringlight
page 366

illumination solutions

For stereo microscopes choosing the right illumination is essential to obtain a perfect image with maximum resolution. LED light sources have a much longer life span, less energy consumption and less heating than halogen light sources

The major advantage of LED illumination is the constant light spectrum at all light intensity levels. These light sources are suitable for all kinds of applications in industry, life sciences and materials sciences

illumination solutions



education university life science industry

ILLUMINATION SOLUTIONS

The right light source solution
can enhance and reveal the
details you want to examine



Illumination solutions

MULTIFUNCTIONAL 150 W HALOGEN OR 30 W POWER-LED • COLD LIGHT SOURCE



A powerful multifunctional 150 W halogen (LE.5211) and 30 W PowerLED cold light source is ideal for the advanced requirements of numerous applications in life and materials science. The intensity is adjustable and has a built-in forced air cooling. The LE.5211 and LE.5211-LED light sources require a light fiber conductor such as the single LE.5213 or the dual LE.5214 light fiber conductors. The LE.5213 and LE.5214 light conductors can be equipped with a lens holder (LE.5222) and a focusing lens (LE.5224)

● ***LE.5211-LED / LE.5211*** *+ LE.5214 +2x LE.5222 + 2x LE.5224*

Power	150 W halogen	30 W PowerLED (equivalent to 120 W halogen)
Luminous flux	21,000 lux max [1]	30,000 lux max.*
Color temperature	3,000 K	6,500 K
Operating voltage	230 V ac / 15 V dc (50/60 Hz)	230 V ac / 12 V dc (50/60 Hz)
Dimensions	(h) 150 x (w) 150 x (d) 230 mm	150 (h) x 150 (w) x 230 mm (d)
Weight	3,9 kg	2.8 kg
Model	**LE.5211**	**LE.5211-LED**

** with LE.5214 dual arm light conductor*

MULTIFUNCTIONAL 100 W HALOGEN • COLD LIGHT SOURCE

This popular multifunctional cold light source contains a 100 W halogen light source. The intensity is adjustable and it has a built-in forced air cooling. The LE.5210 light source requires a light fiber conductor such as the single LE.5213 or the dual LE.5214 light fiber conductors. The LE.5213 and LE.5214 light conductors can be equipped with a lens holder (LE.5222) and a focusing lens (LE.5224). Ideal for all kinds of applications in life and materials sciences, various industrial applications and for stereo microscopy



Power	100 W halogen
Luminous flux	20,000 lux max.*
Color temperature	3,000 K
Operating voltage	110 and 230 V ac / 12 V dc (50/60 Hz)
Dimensions	115 (h) x 320 (w) x 215 mm (d)
Weight	3.8 kg
Model	**LE.5210**

** with LE.5214 dual arm light conductor*

COMPACT SINGLE 20 W LIGHT SOURCE



Compact cold light source with single 40 cm, 6 mm diameter fiber light conductor. Equipped with a 20 W halogen lamp. Light intensity is factory preset and can not be adjusted

Power	20 W halogen
Color temperature	3,000 K
Operating voltage	110 V ac and 230 V ac versions (50/60 Hz)
Dimensions	80 (h) x 110 (w) x 165 mm (d)
Weight	2.0 kg
Model	**LE.5209**

ECONOMICAL AND COMPACT DUAL 3 W LED • LIGHT SOURCE



Economical dual LED intensity adjustable light source with two 44 cm flexible gooseneck arms, each mounted with a 3 W LED. Ideal for applications in life and materials sciences, various industrial applications and for stereo microscopy

Power	2x 3 W LED = 2x 28 W halogen equivalent
Luminous flux	25,000 lux
Color temperature	6,500 K
Operating voltage	100-240 V ac / 5 V dc (50/60 Hz)
Dimensions	70 (h) x 106 (w) x 140 mm (d)
Weight	1.5 kg
Model	**LE.5207**

144 LEDS RINGLIGHT SOURCE • LE.1973

Ring illumination	144 LEDs with adjustable intensity and 4 segment illumination
Color temperature	6,500 K
Illuminance	23,000 lux at 100 mm distance
working distance:	from 55 to 200 mm
Mounting	for stereo head with diameter from 25 to 61 mm
Power supply	100-240 V ac / 12 V dc (50/60 Hz) / 4.5 Watt
External diameter	100 mm
Model	**LE.1973**

LED ringlight source with high illuminance and segment illumination for all kinds of demanding applications

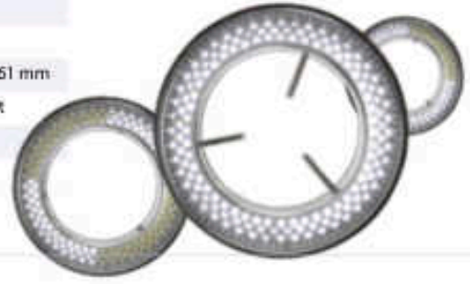

COMPACT 72 LEDS • LE.1974

Compact 20,000 lux LED ringlight source



Ring illumination	72 LEDs with adjustable intensity and 4 segment illumination
Color temperature	6,500 K
Illuminance	21,000 lux at 100 mm distance
working distance:	from 50 to 180 mm
Mounting	for stereo head with diameter from 25 to 61 mm
Power supply	100-240 V ac / 12 V dc (50/60 Hz) / 4 Watt
External diameter	100 mm
Model	**LE.1974**

LED RINGLIGHT • LE.1979

Ring illumination	144 LEDs with adjustable intensity and diffuser
Color temperature	6,500 K
Illuminance	21,000 lux at 100 mm distance
working distance:	50 to 180 mm
Mounting	for stereo head with diameter from 45 to 77 mm
Power supply	290-240 V ac / 12 V dc (50/60 Hz)
External diameter	120 mm
Model	**LE.1979**



POLARIZING LED RINGLIGHT • LE.1975

LED ringlight with white or polarized light for all kinds of demanding applications

Ring illumination	16 high power LEDs with adjustable intensity
Color temperature	6,500-7,500 K
Illuminance	≥ 44000 lux at 100 mm distance
working distance:	from 40 to 120 mm
Mounting	for stereo head with diameter from 25 to 61 mm
Power supply	100-240 V ac / 12 V DC
External diameter	90 mm
Model	**LE.1975**





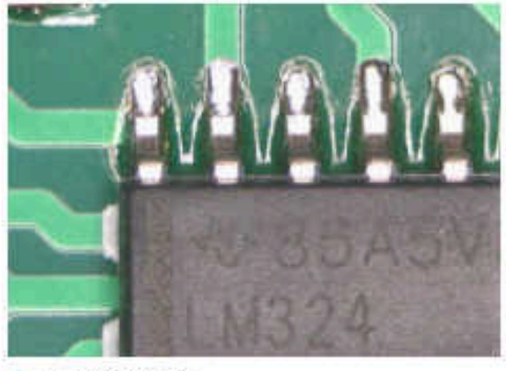

without polarization

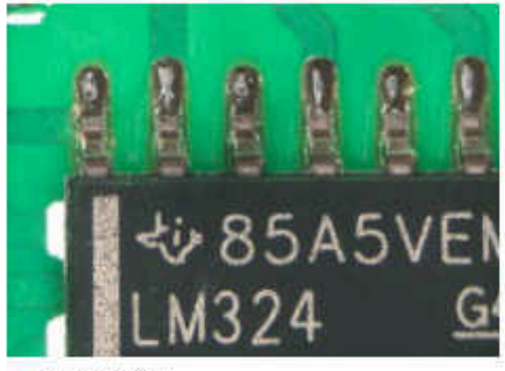

with polarization

ILLUMINATION STATION LE.5212

Light source station with multiple power supply connections for two self-sustaining gooseneck-type guides, one ringlight and one transmitted stage illumination. For stand-alone usage or mounted on stereo microscope pillar stands with diameters up to 44 mm or with 35- and 25-mm pole mounting adapter rings

Each self-sustaining gooseneck-type LED guide is equipped with a 3-lens focusing head and has a length of 56 cm
White 6,500 K LED ringlight generating with 60 LEDs up to 24,000 Lux. Mounting diameters from 21 to 61 mm
Transmitted light stage illumination with a 6,500 K white LED generating up to 8,000 Lux with 42 LEDs.
Stage diameter 94.5 and 15 mm thick



MODELS	3 W gooseneck guide LED	4 W white LED ringlight	2 W white LED transmitted light stage
LE.5212	White LED, 6,500 K	•	•
LE.5212-365	365 nm, monochrome	•	•
LE.5212-395	395 nm, monochrome	•	•
LE.5212-420	420 nm, monochrome	•	•

ACCESSORIES AND SPARE PARTS

for LE.5210, LE.5211 and LE.5211-LED cold light sources

FIBER LIGHT CONDUCTORS

LE.5213 Single arm fiber light conductor, gooseneck self-sustaining, 50 cm long, 4 mm diameter

LE.5214 Dual arm fiber light conductor, gooseneck self-sustaining, 50 cm long, 4 mm diameter

LE.5216 Single arm flexible fiber light conductor, 100 cm long, 4 mm diameter

LE.5222 Focusing head for focusing lens LE.5224 or filters LE.5229 and LE.5231 (for fiber light conductors)

LE.5224 Focusing lens. Requires LE.5222 or LE.5228 for mounting on LE.5213 and LE.5214

LE.5228 Focusing head with iris diaphragm (for fiber light conductors)

LE.5231 Conversion KB12/80B filter

HALOGEN BULBS AND FUSES

SL.5219 Halogen 100 W 12 V bulb with reflector (50 hrs nominal), MR16 fits LE.5210

SL.5230 Halogen 100 W 12 V 'Long Life' bulb (1,000 hrs nominal), MR16 fits LE.5210

SL.5235 Halogen 150 W 15 V bulb (50 hrs nominal), MR16 fits LE.5211

SL.5240 Halogen 150 W 15 V 'Long Life' bulb (500 hrs nominal), MR16 fits LE.5211

FOR LE.5212

LE.5260 Interchangeable self-sustaining gooseneck-type guide with a white 6,500 K high-power LED for NZ.9018, LE.5207 or LE.5212, 1 pc (A)

LE.5261 Interchangeable self-sustaining gooseneck-type guide with a 365 nm high-power UV-LED for NZ.9018, LE.5207 or LE.5212, 1 pc (B)

LE.5262 Interchangeable self-sustaining gooseneck-type guide with a 395 nm high-power Violet-LED for NZ.9018, LE.5207 or LE.5212, 1 pc (C)

LE.5263 Interchangeable self-sustaining gooseneck-type guide with a 420 nm high-power Violet-LED for NZ.9018, LE.5207 or LE.5212, 1 pc (D)

LE.5264 Polarization filter, screw on type for Interchangeable self-sustaining gooseneck-type guides for NZ.9018, LE.5207 or LE.5212, 1 pc

WD = working distance



Dual arm fiber light conductor

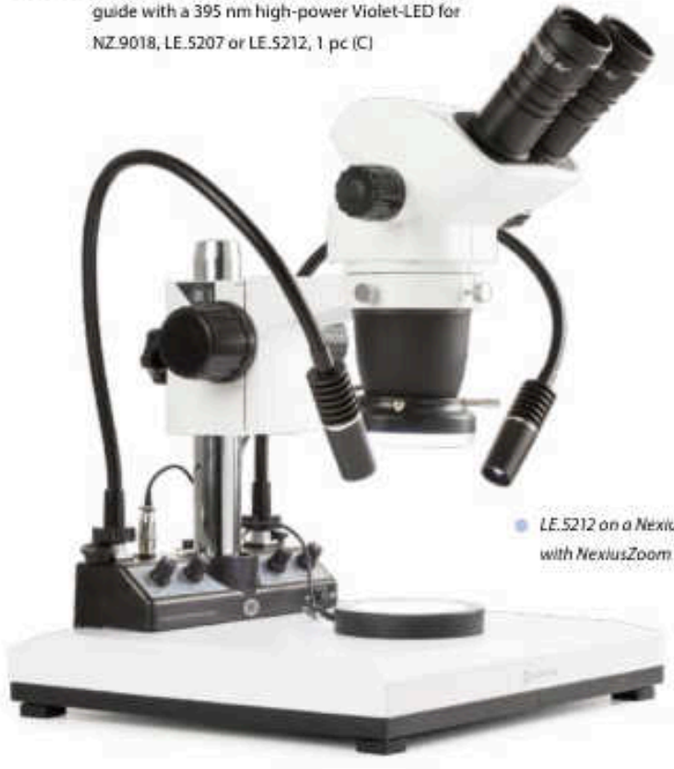

LE.5212 on a NexiusZoom stand (NZ.9000) with NexiusZoom binocular head (NZ.5302)

PREPARATION ACCESSORIES

Euromex offers the right tools for sample preparing. Before using a microscope good samples are essential to get the most accurate results



product information

dissection instruments

PB.5050 Dissecting needle, straight tip with plastic handle

PB.5054 Dissecting needle, lancet-shaped with plastic handle

PB.5056 Blunt-pointed probe, Ø 2 mm, length 140 mm

PB.5058 Section lifter with wooden handle

PB.5060 Serrated thumb dressing forceps, length 13 mm

PB.5062 Dressing forceps with blunt tips, length 13 cm

PB.5064 Dressing forceps with blunt tips, length 20 cm

PB.5067 Dissecting forceps with sharp tips, length 13 cm

PB.5069 Dissecting forceps with finely curved sharp tips, length 13 cm

PB.5077 Cover glass forceps, length 11 cm



SCISSORS AND BLADES

PB.5080 Dressing scissors with blunt/sharp tip, length 14 cm

PB.5084 Dissecting scissors, sharp tips, length 11 cm

PB.5092 Scalpel with blunt tip, length 15 cm

PB.5094 Scalpel handle no. 4 (for blades PB.5095 and PB.5096)

PB.5095 Scalpel blades with sharp tip, 5 pieces per set

PB.5096 Scalpel blades with blunt tip, 5 pieces per set

PB.5103 Strop, double sided for stropping of scalpels, microtome knives. Includes stropping paste

PB.5105 Razor plano/concave, for sectioning. With plastic handle

PB.5106 Microtome knife plano/concave. With fixed handle, length 17 cm

HANDHELD MICROTOMES

MT.5500 Cylinder microtome. Circular stage Ø 70 mm with flat black glass top. Height adjustable with micrometer division 0.01 mm. Complete with plano-concave knife PB.5106 and wooden cabinet

MT.5501 Cylinder microtome. Identical to MT.5500 but without knife and wooden cabinet

MT.5503 Handheld microtome. Box type with table clamp and razor blade holder. Thickness adjustment by 0.025 mm intervals. Complete with wooden cabinet



PREPARATION ACCESSORIES



product information

dissection kits

4-PC DISSECTION KIT PB.5110 IN IMITATION LEATHER CASE

Kit with straight dissecting needle (PB.5050), dissecting forceps (PB.5067), dissecting scissors (PB.5084) and scalpel (PB.5092). Supplied with imitation leather case



PB.5110

6-PC DISSECTION KIT PB.5111 IN PLASTIC CASE

Kit with straight dissecting needle (PB.5050), lancet-shaped dissecting needle (PB.5054), dissecting forceps (PB.5067), dissecting scissors (PB.5084), scalpel handle no. 4 (PB.5094) and blades (PB.5096). Supplied with plastic case



PB.5111

10-PC DISSECTION KIT PB.5112 IN IMITATION LEATHER CASE

Kit with two straight dissecting needles (PB.5050), lancet-shaped dissecting needle (PB.5054), dressing forceps (PB.5062), dissecting forceps (PB.5067), scissors (PB.5080), dissecting scissors (PB.5084), two scalpels (PB.5094), five scalpel blades with straight tip and five blades with blunt tip (PB.5095/PB.5096). Supplied with imitation leather case



PB.5112

9-PC DISSECTION KIT PB.5114 IN WOODEN CASE

Kit with two straight dissecting needles (PB.5050), lancet-shaped dissecting needle (PB.5054), dressing forceps (PB.5062), dissecting forceps (PB.5067), scissors (PB.5080), dissecting scissors (PB.5084), two scalpels (PB.5094), five scalpel blades with straight tip and five blades with blunt tip (PB.5095/PB.5096). Supplied with wooden cabinet



PB.5114

6-PC DISSECTION KIT FOR KOI FISH PB.5115 IN PLASTIC CASE

Dissecting set for Koi fish. Consisting of plastic box with forceps with 1 x 2 points (PB.5060), forceps blunt points, 13 cm (PB.5062), scissors, blunt/ sharp points, 14 cm (PB.5080), microscope scissors, sharp points, 11 cm (PB.5084), blunt-pointed probe (PB.5056), scalpel handle no. 4 (PB.5094), five scalpel blades with straight tip and five blades with blunt tip (PB.5095/PB.5096)



PB.5115

PROFESSIONAL SLIDE PREPARATION KIT PB.5125 IN PLASTIC DELUXE CASE

Kit with three prepared slides, 50 microscope slides (PB.5150) and 100 cover glasses (PB.5165). Two microscope slides with cavity. Canada balsam, dissecting needle (PB.5050 and PB.5054). Dissecting forceps (PB.5067), dissecting scissors (PB.5084) and scalpel (PB.5092). Supplied with plastic deluxe case



PB.5125

MICROSCOPE PREPARED SLIDES



product information

Euromex offers teachers, students and microscopy amateurs a wide range of quality micro-slides, which can be used immediately in biology classes as introduction to histology, zoology and botany

sets with 25 slides for education

histology, zoology and botany set

PB.5211 FOR EDUCATION

Set with 25 microscopy slides for education: histological samples of mammals, zoology and botany.

All microscope slides are supplied in a plastic box for 25 slides. The set contains:

HISTOLOGY

- **SH.1011** Hard bone grinding, human, section
- **SH.1045** Skeletal muscle, dog, l.s and c.s
- **SH.1072** Skin section through hair follicle, human
- **SH.1078** Stratified flat epithelium, dog, section
- **SH.1150** Blood smear, human, Giemsa stained

ZOOLOGY

- **SZ.1510** Amoeba proteus, w.m
- **SZ.1580** Hydra with bud, w.m
- **SZ.1640** Lumbricus - earthworm, c.s
- **SZ.1655** Daphnia sp., water flea, w.m
- **SZ.1715** Musca domestica, house fly, mouth parts
- **SZ.1717** Musca domestica, house fly, leg with clinging pads
- **SZ.1719** Musca domestica, house fly, wing w.m

BOTANY

- **SB.2006** Allium cepa, onion, scale epidermis, w.m
- **SB.2009** Allium cepa, onion, mitosis root tip, l.s
- **SB.2055** Zea mays, corn, stem, cs
- **SB.2060** Triticum aestivum, wheat, stem, c.s
- **SB.2070** Helianthus, sunflower, young stem, c.s
- **SB.2130** Helianthus, sunflower, leaf, c.s
- **SB.2205** Monocot/dicot flower, zea mays/ranunculus, c.s
- **SB.2212** Lilium, lily, ovary, c.s
- **SB.2335** Mnium, w.m
- **SB.2355** Rhizopus nigricans,bread mold, developed sporangia
- **SB.2377** Diatoms, w.m
- **SB.2381** Spirogyra sp., vegetative mass, w.m
- **SB.2405** Dental plaque, smear

histology, zoology and botany set

PB. 5212 FOR EDUCATION

Set with 25 microscopy slides for education: histological samples of mammals, zoology and botany.

All microscope slides are supplied in a plastic box for 25 slides. The set contains:

HISTOLOGY

- **SH.1001** Loose connective tissue, rabbit
- **SH.1005** Hyaline cartilage rabbit, section
- **SH.1160** Lymph node, rabbit, section
- **SH.1230** Small intestine, dog, c.s
- **SH.1250** Liver, pig, section
- **SH.1430** Cerebrum section, dog

ZOOLOGY

- **SZ.1520** Paramecium, w.m
- **SZ.1625** Schistosoma Japonicum, fluke eggs, bilharziose
- **SZ.1630** Taenia, tapeworm cattle, mature proglottid, w.m
- **SZ.1635** Ascaris megalocephala, horse roundworm, female + male, c.s
- **SZ.1708** Apis mellifica, honey bee, mouth parts
- **SZ.1725** Periplaneta, cockroach, mouth parts of chewing type
- **SZ.1730** Pieres brassicae, cabbage-white butterfly, mouth, w.m
- **SZ.1750** Periplaneta, cockroach, spiracle of insect, w.m

BOTANY

- **SB.2095** Monocot/dicot stem, zea mays/pumpkin, c.s
- **SB.2105** Hibiscus, young stem, c.s
- **SB.2110** Cucurbita, pumpkin, stem, l.s
- **SB.2115** Sambucus, elderberry or Morus Alba, mulberry, stem with cork cambium + lenticels, c.s
- **SB.2160** Lilium, lily leaf, c.s
- **SB.2225** Zea mays, corn, corn seed with embryo, l.s
- **SB.2235** Pirus, pear, stone cells, section
- **SB.2240** Triticum aestivum, wheat, kernel, l.s
- **SB.2305** Cyrtomium, holly fern, c.s of rhizom
- **SB.2310** Cyrtomium, holly fern, section
- **SB.2386** Oscillatoria, blue-green algae

USED ABBREVIATIONS	
c.s	cross section
l.s	longitudinal section
w.m	whole mount

histology, zoology and botany set

PB. 5213 FOR EDUCATION

Set with 25 microscopy slides for education: histological samples of mammals, zoology and botany.

All microscope slides are supplied in a plastic box for 25 slides. The set contains:

HISTOLOGY

- **SH.1006** Elastic cartilage, rabbit
- **SH.1040** Smooth muscle, teased preparation, rabbit, l.s+c.s
- **SH.1110** Lung with injected blood vessels, rabbit, c.s
- **SH.1130** Artery and vein, rabbit, c.s
- **SH.1410** Nerve, rabbit, c.s and l.s

ZOOLOGY

SZ.1535 Euglena virides, a flagellate with eyespot
SZ.1586 Hydra, w.m of tentacles
SZ.1620 Schistosoma Japonicum, female, w.m
SZ.1705 Apis mellifica, honey bee, posterior leg, w.m
SZ.1733 Pieres brassicae, cabbage-white butterfly, part of wing
SZ.1738 Locusta, grasshopper, mouth parts, w.m
SZ.1780 Insects - four types of legs, honey bee, house fly, house mosquito, spider
SZ.1877 Rana sp, frog, blood smear

BOTANY

SB.2011 Zea mays, corn root tip with hairs, l.s
SB.2020 Helianthus, sunflower, old root, c.s
SB.2025 Monocot/dicot plant roots, zea mays/helantius, c.s
SB.2040 Solanum tuberosum, potato, starch grains
SB.2075 Tilia, lime tree, one year stem, c.s
SB.2091 Hydrilla stem, c.s
SB.2100 Pelargonium hortorum, geranium, stem c.s
SB.2337 Mnium, antheridial branch, l.s
SB.2339 Mnium, archegonial branch, l.s
SB.2373 Coprinus, ink caps mushroom, section of pleus
SB.2380 Spirogyra sp. in conjugation
SB.2420 3 types of bacteria, cocci, bacilli, spirelli

histology, zoology and botany set

PB. 5214 FOR EDUCATION

Set with 25 microscopy slides for education: histological samples of mammals, zoology and botany.
All microscope slides are supplied in a plastic box for 25 slides. The set contains:

HISTOLOGY OF MAMMALS

SH.1060 Tendon l.s (Dense connective tissue), dog
SH.1075 Skin section with sweat gland, human
SH.1330 Testis rabbit, c.s
SH.1340 Ovary rabbit with developed eggs
SH.1360 Sperm, human, smear
SH.1490 Retina, rabbit, sec

ZOOLOGY

SZ.1522 Paramecium conjugation w.m
SZ.1524 Paramecium in fission, w.m
SZ.1540 Trachelomonas, a free swimming type euglena
SZ.1585 Hydra with endoderm + ectoderm, c.s
SZ.1710 Apis mellifica - honey bee compound eye, w.m
SZ.1720 Culex pipiens - house mosquito, larva w.m
SZ.1724 Giant chromosomes of salivary gland, w.m
SZ.1810 Mya arenaria, clam gill, c.s
SZ.1860 Lancelet, Section through gonads and gills, c.s

BOTANY

SB.2015 Ranunculus, buttercup, root c.s
SB.2076 Tilia, lime tree, 1, 2 & 3 year stem, c.s on one slide
SB.2080 Pinus - pine tree, stem l.s
SB.2140 Triticum, wheat, leaf, c.s
SB.2150 Monocot/dicot leaves,zea mays/ ligustrum lucidum, c.s
SB.2230 Pinus, pine tree, male (cone) globose fruit l.s
SB.2232 Pinus, pine tree, female (cone) globose fruit l.s
SB.2315 Fern, prothallium w. young sporophyte w.m
SB.2320 Cyrtomium, fern, leaf with sporangia
SB.2384 Volvox sp. w.m

histology, zoology and botany set

PB. 5215 FOR EDUCATION

Set with 25 microscopy slides for education: histological samples of mammals, zoology and botany.
All microscope slides are supplied in a plastic box for 25 slides. The set contains:

HISTOLOGY

SH.1043 Cardiac muscle, dog, l.s
SH.1070 Squamous epithelium, human, isolated cells from mouth, smear
SH.1315 Kidney rat, sec. cortex & medulla
SH.1420 Cerebellum section, dog
SH.1450 Spinal cord, rabbit, c.s
SH.1470 Taste buds, rabbit, l.s

ZOOLOGY

SZ.1610 Planaria, flat worm, injected intestinal tube, w.m
SZ.1636 Ascaris megalocephala, horse roundworm, mitosis eggs
SZ.1760 Ctenocephalus canis, dog flea, w.m
SZ.1770 Tetranychus, red spider mite, w.m
SZ.1930 Bird, wing and down feather, section
SZ.1940 Chicken, embryo 48 hours, sagittal section

BOTANY

SB.2090 Hydrilla verticillata, hydrilla stem tip, l.s
SB.2112 Cucurbita, pumpkin, stem, c.s
SB.2135 Nerium oleander, leaf with sunken stomata, c.s
SB.2210 Lilium, lily, anther with mature pollen, c.s
SB.2214 Lilium, lily, pollen, different stages of meiosis
SB.2220 Capsella, shepherds' purse, ovary w. embryo in pre-cotyledon stadium, l.s
SB.2222 Capsella, shepherds' purse, ovary w. embryo in cotyledon stadium, l.s
SB.2234 Pinus, pine tree, pollen, w.m
SB.2330 Marchantia, liverworts, thallus with gemma cup, c.s
SB.2360 Saccaromyces sp., yeast, budding, w.m
SB.2365 Penicillium sp., w.m
SB.2410 Streptococus lactis, milk bacteria, smear
SB.2415 Bacillus subtilis, hay bacteria, smear

USED ABBREVIATIONS	
c.s	cross section
l.s	longitudinal section
w.m	whole mount





sets with 23 slides for education

mammal histology set

PB.5221 SET FOR EDUCATION

Set with 23 microscopy slides for education: histological samples of mammals.

All microscope slides are supplied in a plastic box for 25 slides. The set contains:

EPHITELIUM AND CONNECTIVE TISSUES

SH.1001 Loose connective tissue, rabbit
SH.1005 Hyaline cartilage, rabbit, section
SH.1011 Hard bone grinding, human, section
SH.1049 Muscle types, striated, smooth, heart muscle, dog, l.s
SH.1060 Tendon, dog, l.s
SH.1070 Squamous epithelium, human, isolated cells from mouth, smear
SH.1072 Skin section through hair follicle, human
SH.1078 Stratified flat epithelium, dog, section

RESPIRATORY, BLOOD CIRCULATION AND ENDOCRINE SYSTEM

SH.1120 Trachea rabbit, c.s
SH.1130 Artery and vein, rabbit, c.s
SH.1150 Blood smear, human, Giemsa stained

DIGESTIVE SYSTEM

SH.1210 Stomach wall, dog, section
SH.1230 Small intestine, dog, c.s
SH.1250 Liver, pig, section

URINARY AND GENITAL SYSTEM

SH.1310 Injected kidney, rabbit, sec
SH.1330 Testis, rabbit, c.s
SH.1340 Ovary with developed eggs, rabbit
SH.1376 Human chromosomes in blood, female

NERVOUS SYSTEM AND SENSORY ORGANS

SH.1410 Nerve, rabbit, c.s and l.s
SH.1430 Cerebrum section, dog
SH.1450 Spinal cord, rabbit, c.s
SH.1470 Taste buds, rabbit, l.s
SH.1490 Retina, rabbit, sec

mammal histology set

PB.5222 SET FOR EDUCATION

Set with 23 microscopy slides for education: histological samples of mammals.

All microscope slides are supplied in a plastic box for 25 slides. The set contains:

EPHITELIUM AND CONNECTIVE TISSUES

SH.1006 Elastic cartilage, rabbit
SH.1012 Hard bone grinding of rabbit, tooth, de-calcium
SH.1040 Smooth muscle, teased preparation, rabbit, l.s+c.s
SH.1043 Cardiac muscle, dog, l.s
SH.1045 Skeletal muscle, dog, l.s and c.s
SH.1075 Skin section with sweat gland, human
SH.1080 Ciliated epithelium, trachea, rabbit

RESPIRATORY, BLOOD CIRCULATION AND ENDOCRINE SYSTEM

SH.1110 Lung with injected blood vessels, rabbit, c.s
SH.1140 Pancreas, rabbit, section
SH.1160 Lymph node, rabbit, section
SH.1170 Thyroid gland, rabbit, section
SH.1180 Adrenal gland, rabbit, section

DIGESTIVE SYSTEM

SH.1220 Oesophagus dog, c.s
SH.1235 Large intestine, dog, c.s
SH.1260 Gall bladder, dog, section
SH.1280 Golgi apparatus in Basal spinal ganglion, dog

URINARY AND GENITAL SYSTEM

SH.1315 Kidney, rat, sec. cortex & medulla
SH.1360 Sperm, human, smear
SH.1375 Human chromosomes in blood, male
SZ.1724 Fruit fly, drosophila, giant chromosomes of salivary gland, w.m

NERVOUS SYSTEM AN SENSORY ORGANS

SH.1415 Motor nerve cells with end plates, rabbit, w.m
SH.1420 Cerebellum section, dog
SH.1480 Eyeball section, rabbit, sagittal section

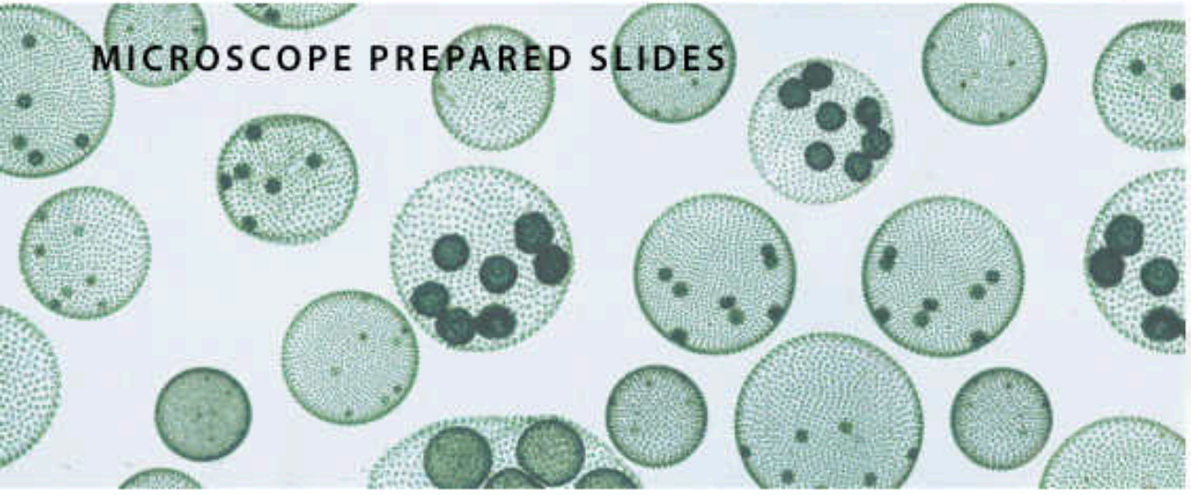

MICROSCOPE PREPARED SLIDES



set for hobby 10 slides

zoology and botany set

PB.5204 SET FOR HOBBY

Set with 10 prepared microscopy slides for hobby: zoology and botany.

All microscope slides are supplied in a plastic box with transparent cover for 25 slides. The set contains:

ZOOLOGY

SH.1040 Smooth muscle, teased preparation, rabbit, l.sand c.s

SH.1110 Lung with injected blood vessels, rabbit, c.s

SZ.1708 Apis mellifica, honey bee, mouth parts

SZ.1733 Pieres brassicae, cabbage white butterfly, part of wing

SZ.1877 Rana sp, frog, blood smear

SB.2015 Ranunculus, buttercup, root, c.s

BOTANY

SB.2160 Lilium, lily leaf, c.s

SB.2222 Capsella, shepherds' purse, ovary w. embryo in cotyledon stadium, l.s

SB.2374 Aspergillus, brown mold, w.m

SB.2384 Volvox sp., w.m

USED ABBREVIATIONS	
c.s	cross section
l.s	longitudinal section
w.m	whole mount

set for hobby 25 slides

slides of histology, zoology and botany

PB.5218 SET FOR HOBBY

Set with 25 prepared microscopy slides for hobby: zoology and botany.

All microscope slides are supplied in a plastic box with transparent cover for 25 slides. The set contains:

HISTOLOGY OF HUMAN AND MAMMALS

SH.1072 Skin section through hair follicle, human

SH.1150 Blood smear human, Giemsa stained

SH.1415 Motor nerve cells with end plates, rabbit w.m

SH.1470 Taste buds, rabbit, l.s

BOTANY

SB.2009 Allium cepa, onion, mitosis root tip, l.s

SB.2055 Zea mays, corn, stem, cs

SB.2075 Tilia, lime tree, one year stem, c.s

SB.2100 Pelargonium hortorum, geranium, stem c.s

SB.2112 Cucurbita, pumpkin, stem, c.s

SB.2130 Helianthus, sunflower, leaf, c.s

SB.2135 Nerium oleander, leaf with sunken stomata, c.s

SB.2210 Lilium, lily, anther with mature pollen, c.s

SB.2225 Zea mays, corn, corn seed with embryo, l.s

ZOOLOGY

SZ.1520 Paramecium, w.m

SZ.1535 Euglena viridis, a flagellate with eyespot

SZ.1580 Hydra with bud, w.m

SZ.1630 Taenia, tapeworm cattle, mature proglottid, w.m

SZ.1635 Ascaris megalocephala, horse roundworm, female and male, c.s

SZ.1640 Lumbricus, earthworm, c.s

SZ.1655 Daphnia sp., water flea, w.m

SZ.1705 Apis mellifica, honey bee, posterior leg, w.m

SZ.1710 Apis mellifica, honey bee compound eye, c.s

SZ.1719 Musca domestica, house fly, wing w.m

SZ.1722 Culex pipiens, house mosquito, female, mouth parts

SZ.1724 Fruit fly, drosophila, giant chromosomes of salivary gland, w.m

MICROSCOPE PREPARED SLIDES



individual euroslides

prepared slides

Euromex supplies complete sets and individual prepared microscope slides for educational use as well as for the hobby market

These high quality microscope slides are usually supplied directly from stock, at the very best prices. The slides on the next page are separately available



HOW TO ORDER INDIVIDUAL EUROSLIDES

Minimum purchase quantity is 10 pieces of the same slide

The individual slides always have to be ordered together with a storage box (e.g. PB.5181 for 25 slides)

individual euroslides for histology

These histological microscope slides consist of sample of ephitelium and connective tissues, the respiratory system, blood circulation, endocrine system, digestive system, urinary and genital systems, nervous system and sensory organs

EPHITELIUM AND CONNECTIVE TISSUES

SH.1001 Loose connective tissue, rabbit
SH.1005 Hyaline cartilage rabbit, section
SH.1006 Elastic cartilage, rabbit
SH.1011 Hard bone grinding, human, section
SH.1012 Hard bone grinding of rabbit, tooth, decalcium
SH.1040 Smooth muscle, teased preparation, rabbit, l.s and c.s
SH.1045 Skeletal muscle, dog, l.s and c.s
SH.1049 Muscle types, striated, smooth, heart muscle, dog, l.s
SH.1060 Tendon, dog, l.s
SH.1072 Skin section through hair follicle, human
SH.1078 Stratified flat epithelium, dog, section
SH.1080 Ciliated epithelium, trachea, rabbit

RESPIRATORY, BLOOD CIRCULATION AND ENDOCRINE SYSTEM

SH.1110 Lung with injected blood vessels, rabbit, c.s
SH.1120 Trachea, rabbit, c.s
SH.1130 Artery and vein, rabbit, c.s
SH.1140 Pancreas, rabbit, section
SH.1150 Blood smear, human, Giemsa stained
SH.1160 Lymph node, rabbit, section

DIGESTIVE SYSTEM

SH.1220 Oesophagus, dog, c.s
SH.1230 Small intestine, dog, c.s
SH.1250 Liver, pig, section

URINARY AND GENITAL SYSTEM

SH.1310 Injected kidney, rabbit, section
SH.1330 Testis, rabbit, c.s
SH.1340 Ovary with developed eggs, rabbit
SH.1360 Sperm, human, smear

NERVOUS SYSTEM AND SENSORY ORGANS

SH.1410 Nerve, rabbit, c.s and l.s
SH.1415 Motor nerve cells with end plates, rabbit, w.m
SH.1420 Cerebellum section, dog
SH.1450 Spinal cord, rabbit, c.s
SH.1470 Taste buds, rabbit, l.s
SH.1490 Retina, rabbit, section

USED ABBREVIATIONS	
c.s	cross section
l.s	longitudinal section
w.m	whole mount

individual euroslides for zoology

This series of zoology microscopy slides consists of samples with single-cell organisms (protozoa), coelenterate, worms (helminthes), Crustaceans (crustaceae), insects and amphibians

PROTOZOA

SZ.1510 Amoeba proteus, w.m
SZ.1520 Paramecium, w.m
SZ.1522 Paramecium in conjugation w.m

SZ.1535 Euglena virides, a flagellate with eyespot
SZ.1540 Trachelomonas, a free swimming type euglena

COELENTERATA

SZ.1580 Hydra with bud, w.m

HELMINTHES

SZ.1630 Taenia, tapeworm pig, mature proglottid, w.m
SZ.1635 Ascaris megalocephala, horse roundworm, female + male c.s
SZ.1636 Ascaris megalocephala, horse roundworm, mitosis eggs
SZ.1640 Lumbricus, earthworm, c.s

CRUSTACEANS

SZ.1655 Daphnia sp., water flea, w.m

INSECTS

SZ.1705 Apis mellifica, honey bee, posterior leg, w.m
SZ.1708 Apis mellifica, honey bee, mouth parts
SZ.1710 Apis mellifica, honey bee compound eye, c.s
SZ.1719 Musca domestica, house fly, wing, w.m
SZ.1720 Culex pipiens, house mosquito, larva, w.m
SZ.1722 Culex pipiens, house modquito, female, mouth parts
SZ.1724 Drosophila, fruit fly, giant chromosomes of salivary gland, w.m
SZ.1730 Pieres brassicae, cabbage-white butterfly, mouth, w.m
SZ.1733 Pieres brassicae, cabbage-white butterfly, part of wing
SZ.1738 Locusta, grasshopper, mouth parts, w.m
SZ.1760 Ctenocephalus canis, dog flea, w.m
SZ.1780 Insects- four types of legs, honey bee, house fly, house modquito, spider

AMPHIBIANS

SZ.1877 Rana sp, frog, blood smear
SZ.1880 Frog uncleaved egg, c.s
SZ.1881 Frog egg, two cells stadium, c.s
SZ.1883 Frog egg, advanced cleavage c.s
SZ.1885 Frog egg, blastula phase, c.s
SZ.1887 Frog egg, early gastrula phase, c.s
SZ.1889 Frog egg, advanced gastrula phase, c.s

HOW TO ORDER INDIVIDUAL EUROSLIDES

Minimum purchase quantity is 10 pieces of the same slide
The individual slides always have to be ordered together with a storage box (e.g. PB.5181 for 25 slides)

individual euroslides for botany

This series of botanic microscopy slides consists of samples of sections of roots, stems, leaves, flowers, fruits and seeds, ferns and mosses, fungi, algae and bacteria

ROOTS

SB.2006 Allium cepa, onion, scale epidermis, w.m
SB.2009 Allium cepa, onion, mitosis root tip, l.s
SB.2015 Ranunculus, buttercup, root, c.s

SB.2020 Helianthus, sunflower, old root, c.s
SB.2025 Monocot/dicot plant roots, zea mays/helantius, c.s
SB.2040 Solanum tuberosum, potato, starch grains

STEMS

SB.2055 Zea mays, corn, stem, c.s
SB.2060 Triticum aestivum, wheat, stem, c.s
SB.2070 Helianthus, sunflower, young stem, c.s
SB.2076 Tilia, lime tree, 1, 2 and 3 year stems on one slide, c.s
SB.2095 Monocot/dicot stem, corn/pumpkin, c.s
SB.2100 Pelargonium hortorum, geranium, stem, c.s
SB.2105 Hibiscus, young stem, c.s
SB.2115 Sambucus, elderberry or Morus Alba, mulberry, stem with crok cambium and lenticels, c.s

LEAVES

SB.2130 Helianthus, sunflower, leaf, c.s
SB.2135 Nerium oleander, leaf with sunken stomata, c.s
SB.2140 Triticum, wheat, leaf, c.s
SB.2150 Monocot/dicot leaves, zea mays/ligustrum lucidum, c.s
SB.2160 Lilium, lily leaf, c.s

FLOWERS, FRUITS AND SEEDS

SB.2205 Monocot/dicot flower, zea mays/ranunculus, c.s
SB.2210 Lilium, lily, anther with mature pollen, c.s
SB.2212 Lilium, lily, overy, c.s
SB.2214 Lilium, lily, pollen, different stages of meiosis
SB.2220 Capsella, shepherds' purse, ovary w. embryo in pre-cotyledon stadium, l.s
SB.2222 Capsella, sheperd's purse, ovary w. embryo in cotyledon statium, l.s
SB.2225 Zea mays, corn seed with embryo, l.s
SB.2232 Pinus, pine tree, female (cone) globose fruit, l.s
SB.2240 Triticum aestivum, wheat, kernel, l.s

FERNS AND MOSSES

SB.2315 Cyrtomium, holly fern, prothallium with young sporophyt, w.m
SB.2337 Mnium, antheridial branch, l.s
SB.2339 Mnium, archegonial branch, l.s

FUNGI

SB.2360 Saccaromyces sp., yeast, budding, w.m
SB.2365 Penicillium sp., w.m
SB.2373 Coprinus, ink caps mushroom, section of pileus
SB.2374 Aspergillus, brown mold, w.m

ALGAE

SB.2377 Diatoms, w.m
SB.2380 Spirogyra sp. in conjugation
SB.2384 Volvox sp., w.m

BACTERIA

SB.2420 3 types of bacteria, cocci, bacilli, spirelli



product information

microscope slides

for professional use

Euromex offers Globe Scientific professional microscope slides in three distinct lines, to meet the demands of today's modern laboratories

MICROSCOPE SLIDES

General purpose microscope slides
The economical alternative for less demanding applications

Diamond Essentials microscope slides
Produced from the highest quality soda lime glass and ideal for use in all routine applications. These slides provide excellent quality while offering substantial savings

Diamond White Glass microscope slides
Produced from superior quality white glass with exceptional clarity, low self-fluorescence and uniform thickness. The glass is formulated for minimal oxidation, which ensures sample integrity during long-term storage. This top quality line is designed for the most demanding applications and provides considerable savings compared to other name brand white glass slides on the market

Globe Scientific microscope slides are offered in a large selection of Colors, corner styles and edges. All slides are pre-cleaned and ready to use. Globe Scientific can also custom produce microscope slides for your particular needs

CORNER/EDGE TYPES

- Traditional style: 90° ground edge/90° corners. Frosted or plain
- Safety corners: 90° ground edge/slightly clipped corners. Corners are slightly clipped for safety and comfort
- Clipped corners: 45° beveled edge/clipped corners. No sharp edges. Perfect for blood smears

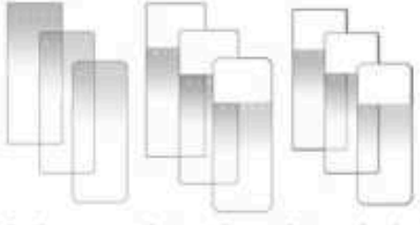

Plain *Frosted* *Frosted and embossed*

GENERAL PURPOSE SLIDES

ITEM	Plain*	Frosted	Ground edge	Safety corners**	Case
1291	•		•	•	1440
1294		one side	•	•	1440

** The plain slides have painted dots in each corner to help alleviate sticking. All slides are pre-cleaned and ready to use*
*** Safety corners: 90° ground edge/slightly clipped corners. Corners are slightly clipped for safety and comfort*

DIAMOND ESSENTIALS

ITEM	90° corners	Safety corners	Clipped corners	Ground edges	Beveled edges	Frosted 1 side	Frosted 2 sides	Color	Case
1301	•			•					1440
1321		•		•					1440
1331			•		•				1440
1304	•			•		•			1440
1324		•		•		•			1440
1334			•		•	•			1440
1308	•			•			•		1440
1328		•		•			•		1440
1338			•		•		•		1440
1304B	•			•		•		Blue	1440
1304G	•			•		•		Green	1440
1304N	•			•		•		Orange	1440
1304P	•			•		•		Pink	1440
1304W	•			•		•		White	1440
1304Y	•			•		•		Yellow	1440
1324B		•		•		•		Blue	1440
1324N		•		•		•		Orange	1440
1324P		•		•		•		Pink	1440
1324W		•		•		•		White	1440
1324Y		•		•		•		Yellow	1440
1334B					•	•		Blue	1440
1334G					•	•		Green	1440
1334P					•	•		Pink	1440
1334W					•	•		White	1440
1334Y					•	•		Yellow	1440

DIAMOND WHITE GLASS

ITEM	Plain	Frosted	Ground edge	Beveled edge	90° corners	Clipped corners	Charged	Color	Case
1380-10	•		•		•				1440
1384-10	•			•		•			1440
1380-20		one side	•		•				1440
1384-20		one side		•		•			1440
1380-30		two sides	•		•				1440
1384-30		two sides		•		•			1440
1380-50B		•	•		•			Blue	1440
1380-50P		•	•		•			Pink	1440
1380-50W		•	•		•			White	1440
1380-50Y		•	•		•			Yellow	1440
1384-50P		•		•		•		Pink	1440
1384-50W		•		•		•		White	1440
1358B		•	•		•		•	Blue	1440
1358G		•	•		•		•	Green	1440
1358P		•	•		•		•	Pink	1440
1358W		•	•		•		•	White	1440
1358Y		•	•		•		•	Yellow	1440
1354W		•		•		•	•	White	1440

COVER GLASSES

Our Cover glass range is produced to meet microscopy and laboratory needs, ensuring precise results in every analysis. Our cover glass protects specimens, minimizes contamination and optimizes optical performance. With premium quality, uniform thickness, exceptional clarity and chemical resistance, our cover glass is versatile for various applications. The cover glass is offered in two thicknesses and various sizes



Cover glasses

KEY FEATURES

- **High quality material**
  Made from chemically-resistant white glass
- **Uniform flatness**
  Ensures consistent sample preparation and examination
- **Aluminum wrapped**
  Prevents sticking, ensuring easy separation
- **2 Thicknesses**
  Available in No. 1 (0.14mm) and No. 1.5 (0.175mm)
- **Recommended use**
  Ideal for manual applications in histology, cytology, urinalysis and microbiology

COVER GLASS

ITEM	Size	Thickness 0.14 mm (nr. 1)	Thickness 0.175 mm (nr. 1.5)	Pcs per box	Per carton
1401-10-200	18 x 18 mm	•		200	1000
1401-15-200	18 x 18 mm		•	200	1000
1402-10-200	20 x 20 mm	•		200	1000
1402-15-200	20 x 20 mm		•	200	1000
1404-10-200	22 x 22 mm	•		200	1000
1404-15-200	22 x 22 mm		•	200	1000
1408-10-100	24 x 32 mm	•		100	1000
1408-15-100	24 x 32 mm		•	100	1000
1415-10-100	24 x 50 mm	•		100	1000
1415-15-100	24 x 50 mm		•	100	1000
1419-10-100	24 x 60 mm	•		100	1000

SLIDE MAILERS

Our range ensures secure transportation and protection for microscope slides. Engineered for durability, our mailers guarantee your specimens arrive intact

RELIABLE PROTECTION

Our mailers safeguard slides from damage, breakage and contaminants during transit, offering peace of mind for analysis or archival purposes

KEY FEATURES

- **Secure Enclosure:** Ensures slides remaining safely enclosed during transportation
- **Shock Absorption:** Minimizes damage risk with sturdy, cushioned interiors
- **Compatibility:** Accommodates standard microscope slide sizes and thicknesses
- **Convenience:** Streamlines packaging and handling with user-friendly designs
- **Versatility:** Offers various configurations to suit specific shipping and storage needs

Cardboard slide mailers
Cardboard slide mailers feature an inner finger groove for effortless slide removal along with a cover that opens for viewing. The flat surface area is ideal for labeling or writing any necessary information. They are lightweight and reusable to minimize cost. The 20-place cardboard slide holder contains a numerical index that corresponds to the inner slide compartments. The inside flaps are recessed so that there is no contact or contamination between the slides and the cover when closed. With a 360° hinge, the cover folds flat underneath to save space when the holder is in use

Extra sturdy plastic slide mailers
Our plastic slide mailers are produced from polypropylene (PP) and feature a snap-close lid to keep slides secure during transport

Plastic slide mailers with flip top lids
These compact plastic slide mailers are produced from polypropylene (PP) and feature a flip-top lid to keep slides secure during transport. The slim design saves valuable space and features inner slots which keep slides separated

Side opening — for 5 slides
The side opening lid provides easy access to the entire length of the slide



Slide mailers

SLIDE STORAGE

Our products ensure the integrity and longevity of your slides. Choose from compact boxes or durable trays to meet your needs

KEY FEATURES

- **Secure storage:**
  Protects slides from damage, dust and contaminants
- **Organization:**
  Various sizes and configurations for efficient workflow
- **Compatibility:**
  Accommodates standard microscope slides
- **Space-efficiency:**
  Maximizes storage space in laboratories

Slide storage boxes

Globe Scientific's microscope slide storage boxes are produced from durable ABS plastic and offer a hinged lid for easy opening and closing. An inventory sheet is affixed to the inside cover for convenient slide identification and organization. The base of the box is cork lined for added protection. Available in four sizes and various colours, these storage boxes accommodate 25 x 75 mm and 1" x 3" microscope slides

Heavy-duty slide storage boxes with stainless steel clasp

These stackable boxes are produced from durable ABS plastic and feature heavy-duty stainless steel clasps and hinged lids for easy opening and closing. An inventory sheet is affixed to the inside cover for convenient slide identification and organization. The base of the box is cork lined for added protection. Available in 6 colours, these storage boxes accommodate 25 x 75 mm microscope slides





SLIDE MAILERS

ITEM	Material	Specifics	Description	Color	Packaging options
513001	Cardboard		holds 1 slide		100 & 1000
513002	Cardboard		holds 2 slides		100 & 1000
513003	Cardboard		holds 3 slides		50 & 500
513004	Cardboard		holds 4 slides		50 & 200
513025	Cardboard		holds 20 slides		1 & 10
513031	Plastic		holds 1 slide	Natural	100 & 1000
513041	Plastic		holds 2 slides	Natural	100 & 1000
513041B	Plastic		holds 2 slides	Blue	100 & 1000
513045	Plastic		holds 3 slides	natural	100 & 1000
513052	Plastic	with flip top lids	holds 2 slides	Natural	100 & 1000
513052B	Plastic	with flip top lids	holds 2 slides	Blue	100 & 1000
513062	Plastic	with flip top lids	holds 5 slides	Natural	100 & 1000
513062B	Plastic	with flip top lids	holds 5 slides	Blue	100 & 1000
513065	Plastic	Side opening	holds 5 slides	Natural	100 & 1000
513055	Plastic	Side opening	holds 5 slides	Natural	100 & 1000

SLIDE SORAGE

ITEM	Number of slides	With tray	Tray alone	Color	Dimensions (L x W x H)	Case
513029A	20			Grey		Each
513029B	20			Blue		Each
513029G	20			Green		Each
513029Y	20			Yellow		Each
513029W	20			White		Each
513250B	100	•		Blue		Each
513250G	100	•		Green		Each
513250P	100	•		Pink		Each
513250W	100	•		White		Each
513250Y	100	•		Yellow		Each
513252B	100		•	Blue		Each
513252G	100		•	Green		Each
513252P	100		•	Pink		Each
513252W	100		•	White		Each
513252Y	100		•	Yellow		Each
513072A	12			Grey	82 x 51 x 35 mm	1
513072B	12			Blue	82 x 51 x 35 mm	1
513072G	12			Dark grey	82 x 51 x 35 mm	1
513072N	12			Orange	82 x 51 x 35 mm	1
513072W	12			White	82 x 51 x 35 mm	1
513072AST	12			(1 ea. A,B,G,N,W)	82 x 51 x 35 mm	5
513075A	25			Grey	96 x 84 x 35 mm	1
513075B	25			Blue	96 x 84 x 35 mm	1
513075G	25			Dark grey	96 x 84 x 35 mm	1
513075N	25			Orange	96 x 84 x 35 mm	1
513075W	25			White	96 x 84 x 35 mm	1
513075Y	25			(1 ea. A,B,G,N,W)	96 x 84 x 35 mm	5
513077A	50			Grey	203 x 82 x 35 mm	1
513077B	50			Blue	203 x 82 x 35 mm	1
513077G	50			Dark grey	203 x 82 x 35 mm	1
513077N	50			Orange	203 x 82 x 35 mm	1
513077W	50			White	203 x 82 x 35 mm	1
513077AST	50			(1 ea. A,B,G,N,W)	203 x 82 x 35 mm	5
513079A	100			Grey	203 x 165 x 35 mm	1
513079B	100			Blue	203 x 165 x 35 mm	1
513079G	100			Dark grey	203 x 165 x 35 mm	1
513079R	100			Red	203 x 165 x 35 mm	1
513079W	100			White	203 x 165 x 35 mm	1
513079N	100			Orange	203 x 165 x 35 mm	1
513079AST	100			(1 ea. A,B,G,N,W)	203 x 165 x 35 mm	5
513080A	100			Grey	203 x 165 x 35 mm	1
513080B	100			Blue	203 x 165 x 35 mm	1
513080G	100			Dark grey	203 x 165 x 35 mm	1
513080N	100			Orange	203 x 165 x 35 mm	1
513080R	100			Red	203 x 165 x 35 mm	1
513080W	100			White	203 x 165 x 35 mm	1
513080AST	100			(1 ea. A,B,G,N,W)	203 x 165 x 35 mm	5



DISPOSABLES

product information

disposables

Microscope slides for educational use

PB.5150 Microscope slides 76 x 26 mm, clear glass, cut edges. 50 pieces

PB.5155 Microscope slides 76 x 26 mm clear glass, ground edges. 50 pieces

PB.5157-W Microscope slides 76 x 26 mm, ground white frosted side, 50 pieces

PB.5157-B Microscope slides 76 x 26 mm, ground blue frosted side, 50 pieces

PB.5160 Microscope slides 76 x 26 mm with concavity, ground edges. 10 pieces

PB.5165 Cover glasses 18 x 18 mm, thickness 0.13-0.17 mm. 100 pieces

PB.5168 Cover glasses 22 x 22 mm, thickness 0.13-0.17 mm. 100 pieces

PB.5170 Cover glasses Ø18 mm, thickness 0.13-0.17 mm. 100 pieces

MICROSCOPE SLIDE BOXES

PB.5181 Black plastic slide box for 25

PB.5180 Wooden slide box for 25 slides. White interior with index

PB.5185 Black plastic slide box for 100 slides



PB.5150



PB.5180



PB.5168 / PB.5170

STAINS

Staining enables observation of cells and tissues of low contrast. Euromex offers a range of common stains



product information

MISCELLANEOUS ACCESSORIES

PB.5200 Staining trough for 10 slides

PB.5210 Fine pointed brush

PB.5245 Lens paper. 100 sheets

PB.5250 Solid paraffin. Melting point 60°C, 200 grams

PB.5255 Immersion oil, refractive index nD = 1.515. (25 ml)

PB.5265 Entellan, quick drying Canada balsam. In bottle (25 ml)

PB.5274 Isopropyl alcohol 99%. In bottle (200 ml)

PB.5277 Formalin 40%, fixing agent. In bottle (200 ml)

PB.5275 Cleaning kit: lens cleaning fluid, lint free lens tissue, brush, air blower, cotton swabs

PB.5276 Microscope maintenance and servicing kit, 16 pieces: cleaning brush, screwdriver set of 6, air blower, 3 Allen keys, 1.5, 2, 2.5 mm, lens cleaning fluid 20 ml, cleaning cloth 140 x 140 mm, 100 lens tissue sheets, tube of maintenance grease, 10 ml bottle of oil, packed in a nice toolbox

(DISSOLVED) STAINS

Supplied in 25 ml bottles

PB.5283 Eosin yellow. Stain for general overall-view coloring

PB.5286 Haematoxylin according to Ehrlich. General purpose nuclear stain

PB.5289 Astra Blue. Stain for vegetal cells. To be used in combination with safranin

PB.5292 Orange-G, stain for most elementary structures of animal tissues

PB.5295 Safranine. A general stain for showing nuclei and cellulose walls. To be used in combination with Astra Blue

PB.5297 Methylene Blue. Biological and bacteriological stain

PB.5300 Analin Blue, to be used as third color for Azo pigmentation

PB.5305 Fuchsine. For staining bacilli in tissue



PB.5276



PB.5286 - PB.5297



PB.5210

PB.5245



other products

optical instruments

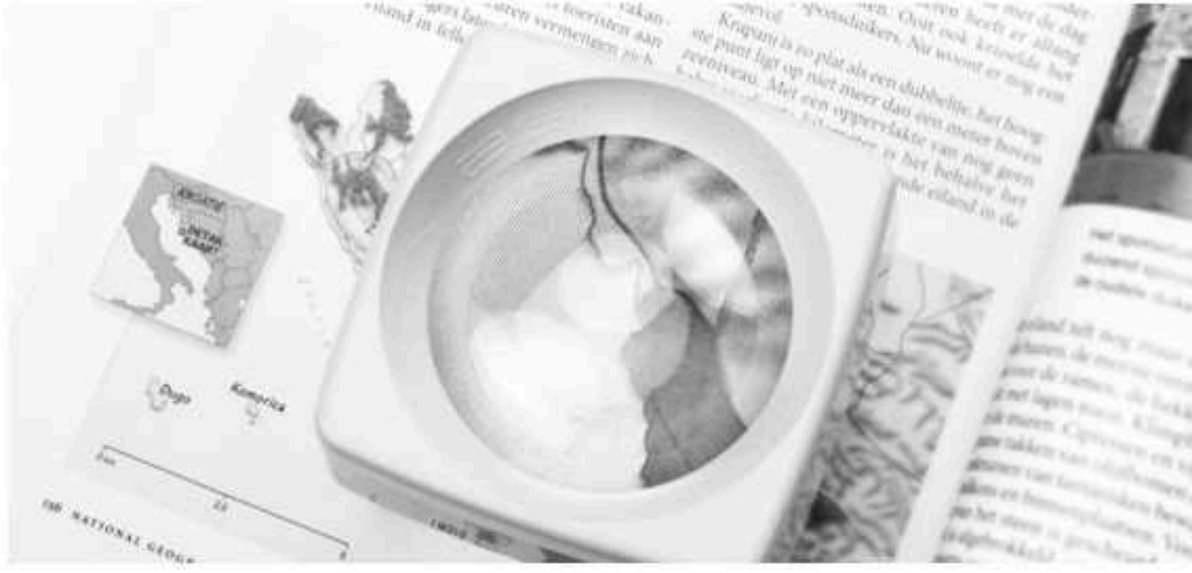

optical instruments

Euromex offers a large range of optical products for
a wide variety of applications in different fields

Our high-quality magnifiers, refractometers and other optical instruments
all ensure an excellent optical quality and unmatched durability

product information

MAGNIFIERS &
MEASURING MICROSCOPES • 396
REFRACTOMETERS • 400
POLARIMETERS • 406
SPECTROMETERS • 408

MAGNIFIERS & MEASURING MICROSCOPES

Magnifiers are widely used by biologists, jewelers, watchmakers and philatelists to accurately observe all details of the object



product information

handheld magnifiers

and magnifiers with handles

PB.5020 Magnifier with handle 4x, lens Ø 50 mm and handle Ø 8 mm. Fits on PB.5022

PB.5021 Magnifier with handle 10x, aplanatic lens Ø 25 mm and handle Ø 8 mm. Fits on PB.5022

PB.5022 Heavy stand with adjustable cross clamp, base Ø 70 mm. Weight 450 grams. For PB.5022 and PB.5021



● *PB.5021*

● *PB.5020*

● *PB.5022*

FOLDING MAGNIFIERS

PB.5016 Aplanatic magnifier 6x, doublet. Lens Ø 20 mm. Field of view 25 mm

PB.5018 Aplanatic magnifier 15x, doublet. Lens Ø 18 mm. Field of view 14 mm

PB.5032 Achromatic magnifier 10x, triplet. Lens Ø 20 mm. Field of view 15 mm

PB.5033 Achromatic magnifier 20x, triplet. Lens Ø 20 mm. Field of view 8 mm

PB.5036 Aplanatic magnifier 10x, doublet. Lens Ø 20 mm. Field of view 20 mm

PB.5037 Achromatic diamond magnifier 10x with four lenses Ø 21 mm. Field of view 25 mm



● *PB.5032*



● *PB.5016*

FOLDING MAGNIFIERS WHITE LED ILLUMINATION

PB.5034-LED Achromatic magnifier 10x triplet. Lens Ø 21 mm. White LED illumination

PB.5018-LED Achromatic magnifier 15x triplet. Lens Ø 21mm. White LED illumination

PB.5033-LED Achromatic magnifier 20x, triplet. Lens Ø 21 mm. White LED illumination

PB.5035-LED Achromatic magnifier 30x triplet. Lens Ø 21 mm. White LED illumination

FOLDING MAGNIFIERS WHITE LED AND UV ILLUMINATION

PB.5034-LUV Achromatic magnifier 10x triplet. Lens Ø 21 mm. White LED and UV illumination

PB.5018-LUV Achromatic magnifier 15x triplet. Lens Ø 21mm. White LED and UV illumination

PB.5033-LUV Achromatic magnifier 20x, triplet. Lens Ø 21 mm. White LED and UV illumination

PB.5035-LUV Achromatic magnifier 30x triplet. Lens Ø 21 mm. White LED and UV illumination



● *PB.5034-LED*



● *PB.5034-LUV*

MAGNIFIERS & MEASURING MICROSCOPES

Measuring microscopes are built with a microscope objective for magnifications from 20 to 100x times



magnifiers & measuring microscopes

TABLE MAGNIFIERS

PB.5039 Table magnifier, 15x magnification.
Glass achromatic lens Ø 19 mm, field of view 15 mm

PB.5041 Table magnifier, 10x magnification.
Glass lens Ø 26 mm, field of view 25 mm

PB.5040 Table magnifier, 8x magnification.
Plastic lens Ø 23 mm, field of view 30 mm.
10mm/100 reticle



● *PB.5039/ PB.5041*



● *PB.5040*

MISCELLANEOUS MAGNIFIERS

PB.5030 Dual sliding magnifier with 3x and 6x magnification.
Lens aperture 23 x 23 mm. Fields of view
50 x 50 mm and 25 x 25 mm. Plastic housing

PB.5049 Linen tester folding magnifier with 6x aplanatic lens.
A 25 x 25 mm base with millimeter scale. Metal casing lacquered in black. Supplied with plastic case



● *PB.5030*



● *PB.5049*

MEASURING MAGNIFIERS WITH RETICLE

PB.5044 Measuring magnifier 7x.
Eyepiece Ø 18 mm. Field of view 24 mm.
Measuring scale 10-0-10 mm divided into
0.1 mm and crosshairs

PB.5045 Measuring magnifier 7x.
Eyepiece Ø 18 mm. Field of view 24 mm.
With 5 interchangeable scales for angle, thickness and linear measurements

PB.5046 Measuring magnifier 10x.
Eyepiece Ø 20 mm. Field of view 35 mm.
Measuring scale 15-0-15 mm with 0.1, 0.2 and
0.5 mm graduations

PB.5047 Measuring magnifier 10x.
Eyepiece Ø 25 mm. Field of view 30 mm.
Measuring scale 15-0-15 mm with 0.1, 0.2 and
0.5 mm graduations. White LED-illumination

MEASURING MICROSCOPES

PB.5008 Measuring microscope 20x with LED illumination.
Measuring scale 7.2 mm with 0.1 mm graduation

PB.5010 Measuring microscope 40x with LED illumination.
Measuring scale 3 mm with 0.05 mm graduation

PB.5012 Measuring microscope 60x with LED illumination.
Measuring scale 1.75 mm with 0.02 mm graduation

PB.5014 Measuring microscope 100x with LED illumination.
Measuring scale 1.1 mm with 0.01 mm graduation



● *PB.5046*



● *PB.5047*



● *PB.5044*



● *PB.5008*



● *PB.5045*



refractometers

Refractometers are used for the identification of substances and concentration measurements of fluids. Because the refractive index (R.I.) of a solution is proportional to the concentration, it is easy to identify the substance or to measure the purity and concentrations of solutions

The Euromex refractometers are calibrated at 20° Celsius. Most refractometers are equipped with Automatic Temperature Compensation (ATC)

refractometers



refractometer

REFRACTOMETERS • PAGE 402
ABBE REFRACTOMETER • PAGE 405



REFRACTOMETERS

The Euromex refractometers are ideal for determining concentrations, testing and measuring of fluids

● *Analog refractometer*

● *Digital refractometer*

refractometers

handheld and table models

A refractometer is an instrument that measures the refractive index of a liquid or refractive material such as sugar concentrations in fruits, juices, soft drinks, energy drinks, wines or must, liquors, jams, honey, industrial lubricants, antifreeze, ethanol, battery acids, salt, propylene glycol, ethylene glycol solutions

A few drops of the liquid that needs to be examined are gently deposited on a measuring prism and covered with a cover glass. The rays of the light source (ambient light, built-in LED light source or external cold-light source) will be bent (refracted) in function of the composition of the liquid under observation

This results in a shadow line between a dark and a light portion. The measured value can be directly read through a focusable eyepiece on a refraction index scale and/or on a specific built-in scale(s) of the refractometer in Brix, Oechsle, Babo units or % volume, specific gravity, protein in serum or in °C

Euromex offers portable or handheld refractometers, analogue or digital and laboratory Abbe refractometer products used in wine making, distilling, food processing, canning, beekeeping, brewing, pharmaceutical, manufacturing, machining, automotive industries

Most of the refractometers have also an A(utomated) T(emperature) C(ompensation) mechanism in order to compensate for temperature variations. Calibration can be verified with a calibration fluid (in most cases distilled water) and adjusted by a screw if needed

Application	Art no	Range		Accuracy	Remarks	ATC	Handheld model	Table model	Analog	Digital
Concentrations of sugar in marmalades, fruits, syrups, wine and monitoring of oil emulsions	RF.6190	0-90	Brix	0.2	3 scales: 0-42 / 42-71 / 71-90 Brix		•		•	
	RF.6510	0 - 10	Brix	0.1		•	•		•	
	RF.6520	0 - 20	Brix	0.1		•	•		•	
	RF.6532	0 - 32	Brix	0.2		•	•		•	
	RF.6562	28 - 62	Brix	0.2		•	•		•	
	RF.6580	0 - 80	Brix	0.5		•	•		•	
	RF.6582	45 - 82	Brix	0.5		•	•		•	
	RF.6592	58 - 92	Brix	0.2		•	•		•	
	RF.6635	0 - 150 0 - 35 0 - 27 0 - 22 0 - 37	°Oe Brix °KMW % CNM	1 0.2 0.2 0.2 0.5	Oechsle units Sugar concentration Babo units % volume	•	•		•	
	RD.6735	0 - 150 0 - 35 0 - 25 0 - 22	°Oe Brix °KMW %	1 0.1 0.1 0.1		•	•			•
	RD.6645	0 - 45 1.33 - 1.41	Brix R.I.	0.1 0.0003		•	•			•
	RD.6666	0 - 80 1.33 - 1.51	Brix R.I.	0.5 0.0005		•	•			•
	RD.6667	58 - 92 1.43 - 1.52	Brix R.I.	0.2 0.0003		•	•			•
Honey	RF.6642	13 - 25	%	0.1	Honey moisture	•	•		•	
	RF.6644	58 - 92 38 - 43 12 - 27	Brix °Be %	0.5 0.5 1	 Water	•	•		•	
Concentration of sugar/alcohol %	RF.6627	0 - 25 0 - 40 0 - 20	% Brix Baume	0.2 0.2 0.2	% volume	•	•		•	
Salinity and concentration of sugar	RF.6610	0 - 100 0 - 10 1.00 - 1.07	‰ Brix R.I.	1 0.1 0.005		•	•		•	
	RF.6628	0 - 28	%	0.2		•	•		•	
	RD.6728	0 - 28 0 - 45 1.33 - 1.41	% Brix R.I.	0.1 0.1 0.0003	% NaCl Only for sugar/salt	•	•			•
Clinical applications Proteins	RF.6612	0 - 12 1.00 - 1.05 1.333 - 1.360	g/dl sg R.I	0.2 0.002 0.0003	Proteins in serum Urine specific gravity	•	•		•	
	RF.6614	2 - 14 1.00 - 1.06 1.00 - 1.06	g/dl sg sg	0.1 0.001 0.001	Proteins in serum Urine specific gravity (dog) Urine specific gravity (cat)	•	•		•	

Application	Art no	Range		Accuracy	Remarks	ATC	Handheld model	Table model	Analog	Digital
	RD.6712	0 - 12	g/dl	0.1	Proteins in serum	•	•			•
		1.00 - 1.05	sg	0.001	Urine specific gravity					
		1.33 - 1.39	R.I.	0.0001						
	RD.6714	0 - 14	g/dl	0.1	Proteins in serum (dog)	•	•			•
		0 - 14	g/dl	0.1	Proteins in serum (cat)					
		1.00 - 1.06	sg	0.001	Urine specific gravity (dog)					
		1.00 - 1.06	sg	0.001	Urine specific gravity (cat)					
		1.33 - 1.39	R.I.	0.0001						
Battery Acid/Coolant	RF.6650	1.10 - 1.40	sg	0.01	Battery fluids	•	•		•	
		-50 / 0	°C	5	Ethylene glycol G13					
		-50 / 0	°C	5	Propylene glycol G11/12					
		-40 / 0	°C	10	windshield washer fluid					
	RD.6730	1.0 - 1.50	sg	0.01	Battery fluids	•	•			•
		-50 / 0	°C	0.5	Ethylene glycol G13					
		-50 / 0	°C	0.5	Propylene glycol G11/12					
		-40 / 0	°C	0.5	windshield washer fluid					
AdBlue/Urea	RF.6652	0 - 40	%	0.2		•	•		•	
Identification of precious stones	RF.6381	1.30 - 1.81	R.I.	0.01				•	•	

ACCESSORIES AND SPARE PARTS

LE.5209 20 W 12 V cold light source with single fiber light conductor (for Abbe refractometer 98.490)

98.492 Thermometer 0-50° C (for Abbe refractometer 98.490)

98.496 Calibration slide nD 1.5163 (for Abbe refractometer 98.490)

● *Digital refractometer*





● *RF.6381*



● *98.490*

Abbe laboratory
refractometer
substance identification

The Abbe laboratory refractometer is a bench-top instrument for high-precision measurements of an index of refraction and suitable for determination of the refractive index of solid samples, such as glass, plastics and polymer films

The instrument is supplied with a thermometer and water connection to control fluid temperatures. Also equipped with a Brix and a refraction index scale and supplied with a test plate

Capable of measuring all kinds of concentrations and identifying several types of substances

The Abbe refractometer can be connected to a water bath for measuring at a controlled temperature. During the use of this type of refractometer the use of a cold light source such as the LE.5209 is recommended.
This Abbe table refractometer has scales for measurement of sugar concentrations and refractive indices. Delivered with carrying case, digital thermometer, calibration plate, adjusting tool and with 0.5 ml calibration liquid



product information

Substance identification of sugar concentration

MODEL	Range	Accuracy	Remarks	Analog
98.490	0-95 Brix	0.1	Abbe table refractometer without light source	•
	1.300-1.700 RI	0.0002		

polarimeters & spectroscopes



polarimeters & spectroscopes

A polarimeter measures the rotation angle of polarized light traveling through an optically active substance. The rotation angle of the polarization plane of linear polarized light is different for each optical active substance as described in the Law of Biot

Polarimetry is a non-destructive test method for measuring optical activity of organic and inorganic substances. It is very useful to analyze expensive non-reproducible samples. Polarimeters are extensively used for quality and process control in research laboratories in the chemical and food industry

Spectroscopes are used to visualize the light spectrum of light sources

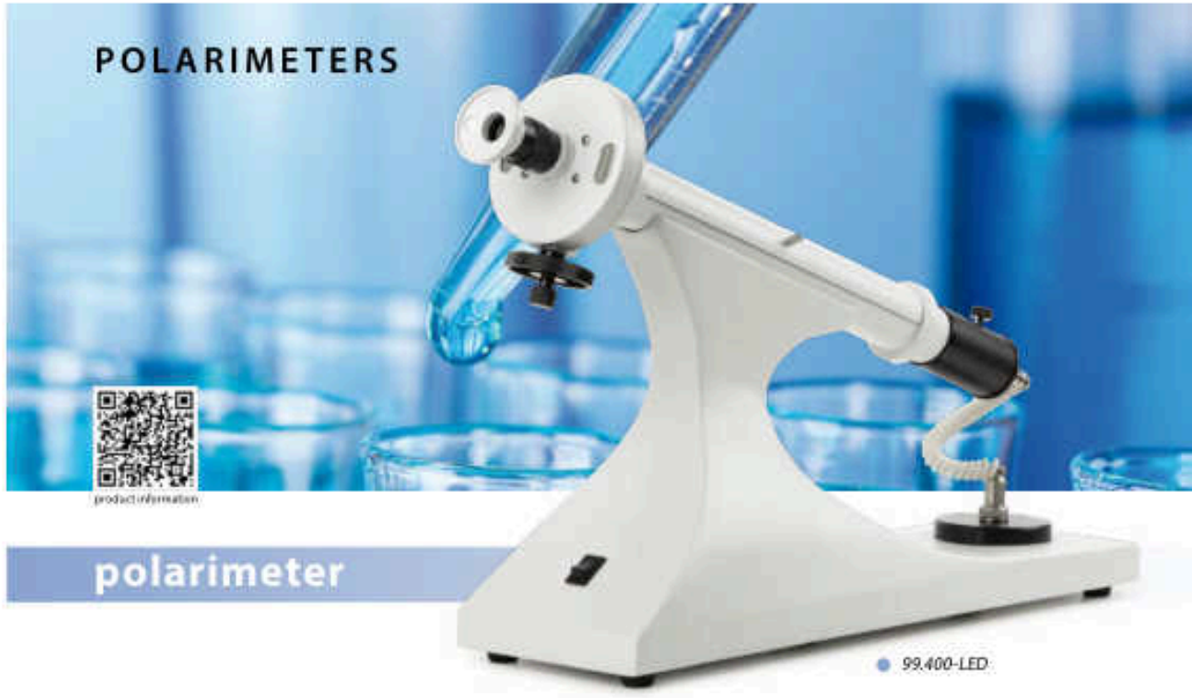

polarimeter

99.400-LED

Polarimeters are suitable for fast and accurate measurements of sugars, glucose, perfume, chemical substances and medical drugs. Equipped with a Glan Thomson prism and Laurent Quartz plate, a built-in 230 V 589.3 nm sodium lamp or a high-power LED with 589.3 nm filter

HIGHLIGHTS

The polarimeters are delivered with 100 and 200 mm observation tubes

Equipped with a built-in 230 V 589.3 nm sodium lamp or high-power LED with 589.3 nm filter

Fast and accurate

Polar scale, range ± 180° with 0.1° readings. Supplied with observation tubes of 100 mm and 200 mm. Bright light measuring field permits reading with accuracy of 0.1° with aid of Vernier



ACCESSORIES FOR 99.400

99.410	Measuring tube, 100 mm long
99.415	Measuring tube, 200 mm long
99.430	Cover glass for measuring tube Ø 15 mm
99.431	Rubber ring (for 99.430)
99.197	Spare sodium 589.3 nm lamp

MODEL	Scales	Accuracy	Observation tubes 100 and 200 mm	230 V sodium lamp with 589.3 nm filter	230 V High power LED with 589.3 nm filter
99.400	± 180°	± 0.1 ° polar scale	•	•	
99.400-LED	± 180 °	± 0.1 ° polar scale	•		•



SPECTROSCOPES

Euromex handheld spectroscopes are used for optical experiments in natural sciences, industry and education

product information

handheld spectroscopes

SP.5200

Handheld spectroscope with adjustable slit, comparison prism, mirror, five glass mini-cuvettes and wavelength scale 400 - 700 nm with 589 nm indication. Divisions 10 nm



SP.5200

- **Direct vision type**
- **Adjustable eye lens**
- **Adjustable slit 0 - 1 mm**
- **Angle dispersion C - F 7°**
- **Linear dispersion 60 mm**
- **Comparison prism for comparison between products**
- **Mirror**
- **5 Glass cuvettes**
- **Wavelength scale 400 - 700 nm**

MODEL	Dimensions	Weight (grams)	Adjustable slit	Comparison prism	Angle dispersion	Linear dispersion	Wavelength scale	589 nm indication	With 5 glass cuvettes
SP.5200	h50xl115xp23	250	0-1 mm	•	C-F 7°	60 mm	•	•	•

SP.5155

Handheld spectroscope with adjustable slit and comparison prism, mirror and five glass cuvettes

- **Direct vision type**
- **Adjustable eyelens**
- **Adjustable slit 0 - 1 mm**
- **Angle dispersion C - F 7°**
- **Linear dispersion 60 mm**
- **Comparison prism**
- **Mirror**
- **five Glass cuvettes**



SP.5155

MODEL	Dimensions	Weight (grams)	Adjustable slit	Comparison prism	Angle dispersion	Linear dispersion	Wavelength scale	589 nm indication	With 5 glass cuvettes
SP.5155	h45x l105xd23	125	0-1 mm	•	C-F 7°	60 mm	--	--	•

SP.5150

Handheld spectroscope with adjustable slit from 0 tot 1 mm

- **Direct vision type**
- **Adjustable eye lens**
- **Adjustable slit 0 - 1 mm**
- **Angle dispersion C - F 7°**
- **Linear dispersion 60 mm**



SP.5150

MODEL	Dimensions	Weight (grams)	Adjustable slit	Comparison prism	Angle dispersion	Linear dispersion	Wavelength scale	589 nm indication	With 5 glass cuvettes
SP.5150	90 x18 mm Ø	92	0-1 mm	--	C-F 7°	60 mm	--	--	--

SP.5100

Handheld spectroscope with fixed slit

- **Direct vision type**
- **Adjustable eye lens**
- **Fixed slit**
- **Angle dispersion C - F 6°**
- **Linear dispersion 40 mm**



SP.5100

MODEL	Dimensions	Weight (grams)	Adjustable slit	Comparison prism	Angle dispersion	Linear dispersion	Wavelength scale	589 nm indication	With 5 glass cuvettes
SP.5100	90 x18 mm Ø	72	--	--	C-F 6°	40 mm	--	--	--

choose the right

euromex microscope

Euromex offers a large range of microscope series. Selecting the right microscope for your application might be challenging and time consuming.
To simplify this process we have listed our recommended models for most common applications in education, laboratories and industry

microscope selector

EDUCATION	FIELD OF APPLICATION	RECOMMENDED MODELS
• botany	Study of plants as branch of biology. Plant anatomy and morphology. Plant genetics and ecology. Plant biochemistry	MicroBlue, EcoBlue, BioBlue, BlueScope, BioBlue.Lab, AP series, EduBlue, StereoBlue
• digital imaging	Observation and perform analysis on microscope images, storage and share captured and videos	CMEX cameras, CCD cameras, HD cameras, EduPad, MacroZoom
• electronics	Development, production, assembling and inspection of electronic components or circuitry	bScope *, EduBlue, StereoBlue, NexiusZoom, MacroZoom
• entomology	Study of insects as branch of zoology. Identification and classification of beetles, flies, termites, moths and butterflies, bees, ants, wasps	MicroBlue, EcoBlue, BioBlue, BlueScope, BioBlue.Lab, AP series, EduBlue, StereoBlue, MacroZoom
• geology, mineralogy	Earth Science, Study of solids, rocks and processes. Identification and classification of rocks and minerals	EcoBlue***, BioBlue***, AP series, EduBlue, StereoBlue
• geology, petrology	Identification by means of petrographic microscope	EcoBlue***, BioBlue***, AP series, EduBlue, StereoBlue
• mechanics	Manufacturing and quality inspection of mechanical parts	bScope *, EduBlue, StereoBlue, NexiusZoom, MacroZoom
• microbiology	Study of microscopic uni-, multi- or acellular small organisms such as protozoa, algae, bacteria and more. Identification and classification	MicroBlue, EcoBlue, BioBlue, BlueScope, bScope
• mycology	Study of fungi as branch of biology. Identification and classification	MicroBlue, EcoBlue, BioBlue, BlueScope, BioBlue.Lab, bScope, AP series, EduBlue, StereoBlue
• petrology	Study of the composition and structure of rocks as branch of geology. Identification by means of polarization microscopes	EcoBlue***, BioBlue***, AP series, EduBlue, StereoBlue
• zoology	Animal biology. Study of invertebrates and vertebrates and related branches	MicroBlue, EcoBlue, BioBlue, BlueScope, BioBlue.Lab, bScope, AP series, EduBlue, StereoBlue, MacroZoom

UNIVERSITY LABS	FIELD OF APPLICATION	RECOMMENDED MODELS
• agronomy & forestry	Selective breeding of plants, fruit and production of food from plants, wood from trees, fuel. Plant physiology and genetics research	BlueScope, BioBlue.Lab, bScope, iScope, Achios-X Observer, StereoBlue, NexiusZoom, DZ series, MacroZoom
• anatomopathology	Diagnosis of diseases of organs or tissues. Cytopathology and forensic pathology	BioBlue.Lab, bScope, iScope, Delphi-X Observer, NexiusZoom, DZ series, UltraZoom
• asbestos control	Research of asbestos fibers, environmental protection during restoration of older buildings	iScope (asbestos and polarization), NexiusZoom, DZ series, UltraZoom, Z series
• bacteriology	Study of bacteria as subdivision of microbiology. Identification, classification	BlueScope, BioBlue.Lab, bScope, iScope, Achios-X Observer, Delphi-X Observer
• biochemistry	Study of chemical processes within living organism. Identification and classification of enzymes and structure of biomolecules	BioBlue.Lab, bScope, iScope, Achios-X Observer, Delphi-X Observer
• biomedical	Study of medical microbiology, virology, epidemiology, biomedical engineering	BioBlue.Lab, iScope, Achios-X Observer, Delphi-X Observer
• biotechnology	Study of living organism in order to make food products, for plant protection (genetically modified organism) and other bio-process engineering. Development of pharmaceutical drugs, genetic testing, enzymes production, biofuels, textile	BioBlue.Lab, bScope, iScope, Achios-X Observer, Delphi-X Observer, StereoBlue, NexiusZoom, DZ series, UltraZoom
• botany	Study of plants as branch of biology. Plant anatomy and morphology. Plant genetics and ecology. Plant biochemistry	BlueScope, BioBlue.Lab, bScope, StereoBlue, NexiusZoom, DZ series, UltraZoom, MacroZoom
• cell culture	Controlled growing of cells and tissues, fungal culture and microbiological culture	Delphi-X Inverso, Achios-X Observer, Oxion Inverso, NexiusZoom, DZ series, UltraZoom
• chemistry	Study of the composition and properties of chemicals	BioBlue.Lab, iScope */***, Achios-X Observer*, bScope *, NexiusZoom, DZ series, UltraZoom
• cosmetics	Research, development and testing (safety) of substances for make-up or perfume	iScope *, bScope *, NexiusZoom, DZ series
• cytology	Study of cell structure, function and chemistry. Detection of cellular diseases	BioBlue.Lab, iScope, Achios-X Observer, Delphi-X Observer
• dermatology	Study and diagnosis, treatment of skin, nails and hair diseases	BlueScope, BioBlue.Lab, bScope, iScope, Achios-X Observer, NexiusZoom, StereoBlue, DZ series, UltraZoom, MacroZoom
• digital imaging	Observation and analysis of microscope images, save and share captured images and videos	CMEX cameras, CCD cameras, HD cameras, Cooled cameras, EduPad, ProPad
• electronics	Development, production, assembly and inspection of electronic components or circuitry	iScope *, Achios-X Observer*, bScope *, StereoBlue, NexiusZoom, DZ series, Z series, UltraZoom, MacroZoom
• embryo collection	Embryo collection and transfer in mares, pigs, cows. Quality control	NexiusZoom, DZ series, Z series

* materials models, ** fluorescence models, *** polarization models

UNIVERSITY LABS	FIELD OF APPLICATION	RECOMMENDED MODELS
• embryology	Study of gametes, embryos and foetuses	BioBlue.Lab, iScope, StereoBlue, NexiusZoom, DZ series, UltraZoom
• entomology	Study of insects as branch of zoology. Identification and classification of beetles, flies, termites, moths and butterflies, bees, ants, wasps	BlueScope, BioBlue.Lab, bScope, iScope, StereoBlue, NexiusZoom, DZ series, UltraZoom, MacroZoom
• environmental	Monitoring of environmental conditions such as water, atmosphere, ecosystems, soil and pollution	BioBlue.Lab, bScope, iScope, StereoBlue, NexiusZoom, DZ series, UltraZoom
• fluorescence	Study of living and non-living materials with the help of fluorescence markers (fluorochromes)	iScope **, Achios-X Observer**, Delphi-X Observer**, Oxion Inverso**, bScope **, DZ series**, UltraZoom**
• food and beverages	Quality and safety controls, before, during and after the production of food and beverages	BioBlue.Lab, bScope, iScope
• forensics	Analysis of scientific evidence. Toxicology, fingerprints, Forensic anthropology and archeology, forensic botany and entomology	BioBlue.Lab, iScope, iScope */ ***, Achios-X Observer, Achios-X Observer**, Achios-X Inverso, Oxion Inverso, Oxion Inverso*, NexiusZoom, DZ series, UltraZoom, Z series
• genetics	Study of genes, heredity in living organisms including bacteria, plants, animals and humans	iScope, Achios-X Observer, Delphi-X Observer, DZ series, UltraZoom
• geology, mineralogy	Earth Science; Study of solids, rocks and processes. Identification and classification of rocks and minerals	iScope *, bScope *, StereoBlue, NexiusZoom, DZ series, UltraZoom, MacroZoom
• geology, petrology	Identification by means of petrographic microscopy	iScope ***, Delphi-X Observer***, StereoBlue, NexiusZoom, DZ series, UltraZoom
• glass industry	Quality control, before, during and after the production of glass and coatings	iScope *, Achios-X Observer*, Oxion Inverso*, bScope *, StereoBlue, NexiusZoom, DZ series, UltraZoom
• hematology	Study and diagnosis, treatment and prevention of diseases of the blood	iScope, Achios-X Observer, bScope (darkfield), iScope (darkfield), Oxion (darkfield)
• histopathology	Microscopic examination of tissue, diagnosis of diseases	iScope, Achios-X Observer, Delphi-X Observer
• horticulture	Selective breeding of plants and fruit for production of food	BlueScope, BioBlue.Lab, bScope, iScope, Achios-X Observer, StereoBlue, NexiusZoom, DZ series, UltraZoom, MacroZoom
• in vitro fertilization	In vitro fertilization IFV. Quality control of collected egg and sperm	StereoBlue, NexiusZoom, DZ series, UltraZoom, Z series
• marine biology	Study of organisms living in the ocean or seas as branch of biology	BlueScope, bScope, BioBlue.Lab, iScope, Achios-X Observer,
• mechanics	Manufacturing and quality inspection of mechanical parts	Delphi-X Observer*, Achios-X Observer*, iScope *, Achios-X Inverso*, Oxion Inverso*, bScope *, StereoBlue, NexiusZoom, DZ series, UltraZoom, MacroZoom
• metallurgy	Manufacturing and quality inspection of metallic elements, intermetallic compounds and alloys	Delphi-X Observer*, Achios-X Observer*, iScope *, bScope *, bScope large samples, StereoBlue, NexiusZoom, DZ series, UltraZoom, MacroZoom
• microbiology	Study of microscopic uni-, multi- or acellular small organisms such as protozoa, algae, bacteria and more	iScope, Achios-X Observer, StereoBlue, NexiusZoom, DZ series, UltraZoom
• mycology	Study of fungi as branch of biology	BlueScope, BioBlue.Lab, bScope, iScope, Achios-X Observer, StereoBlue, NexiusZoom, DZ series, UltraZoom

UNIVERSITY LABS	FIELD OF APPLICATION	RECOMMENDED MODELS
• mining	Extraction of minerals for identification, quantitative and qualitative evaluation of minerals	Achios-X Observer*, iScope * (polarization), Oxion Inverso*, bScope *, bScope large samples, StereoBLue, NexiusZoom, DZ series, UltraZoom, MacroZoom
• neuropathology	Study and diagnosis of diseases in nervous system tissue	Delphi-X Observer, Achios-X Observer, iScope, StereoBlue, NexiusZoom, DZ series, UltraZoom
• oncology	Study and diagnosis, treatment and prevention of cancers	Delphi-X Observer, Achios-X Observer, iScope
• ornithology	Study of birds as branch of zoology. Diagnosis of diseases in birds such as competition pigeons	BlueScope, BioBlue.Lab, bScope, iScope, Achios-X Observer, StereoBlue, NexiusZoom, DZ series, UltraZoom
• paleontology	Study of fossils in order to determinate organisms evolution	Achios-X Observer*, iScope *, bScope *, StereoBlue, NexiusZoom, DZ series, UltraZoom, MacroZoom
• paper industry	Production of paper related products. Quality inspection	Achios-X Observer*, iScope *, bScope *, StereoBlue, NexiusZoom, DZ series, UltraZoom, MacroZoom
• parasitology	Study of parasites, medical and veterinary	BlueScope, BioBlue.Lab, bScope, iScope, Achios-X Observer, StereoBlue, NexiusZoom, DZ series, UltraZoom, MacroZoom
• pathology	Study and diagnosis of diseases	Delphi-X Observer, Achios-X Observer, iScope
• petrochemical	Research and transformation of crude oil and natural gas	Achios-X Observer*, iScope *, bScope *, StereoBlue, NexiusZoom, DZ series
• petrology	Study of the composition and structure of rocks as branch of geology. Identification by means of polarization	iScope ***, StereoBlue, NexiusZoom, DZ series, UltraZoom
• pharmaceutics	Development and production of drugs for medication. Quality assurance and inspection of produced products	Delphi-X Observer*/**, Achios-X Observer*/**, iScope ***, StereoBlue, NexiusZoom, DZ series, UltraZoom
• phytopathology	Study and diagnosis of plant diseases	BlueScope, BioBlue.Lab, bScope, iScope, Achios-X Observer, StereoBlue, NexiusZoom, DZ series, UltraZoom
• plastics	Development and production of plastics and plastic based compounds. Quality assurance and inspection	Achios-X Observer*, iScope *, Oxion Inverso*, bScope *, StereoBlue, NexiusZoom, DZ series, UltraZoom
• textile	Development and production of all kinds of textile based products. Quality assurance and inspection	Achios-X Observer*, iScope *, bScope *, AP series, StereoBlue, NexiusZoom, DZ series, UltraZoom, MacroZoom
• veterinary medicine	Prevention, diagnosis and treatment of diseases, injuries in animals	BlueScope, BioBlue.Lab, bScope, iScope, Achios-X Observer, Achios-X Inverso, Oxion Inverso, StereoBlue, NexiusZoom, DZ series, UltraZoom
• virology	Study and diagnosis of viruses and virus-like agents	Delphi-X Observer, Achios-X Observer, iScope, BioBlue.Lab, bScope
• water treatment	Production of drinking water and wastewater treatment. Quality control and disease prevention	BlueScope, BioBlue.Lab, bScope, iScope, Achios-X Observer
• wood production	Wood production for construction material, fuel. Quality control	Achios-X Observer*, iScope*, Oxion Inverso*, bScope *, bScope large samples, AP series, Stereo-Blue, NexiusZoom, DZ series, UltraZoom, MacroZoom
• zoology	Animal biology. Study of invertebrates and vertebrates and related branches	BioBlue.Lab, bScope, iScope, StereoBlue, NexiusZoom, DZ series, UltraZoom

* materials models, ** fluorescence models, *** polarization models

LIFE SCIENCE LABORATORIES	FIELD OF APPLICATION	RECOMMENDED MODELS
• agronomy & forestry	Selective breeding of plants, fruit and production of food from plants, wood from trees, fuel. Plant physiology and genetics research	BlueScope, BioBlue.Lab, bScope, bScope large samples, iScope, Achios-X Observer, StereoBlue, NexiusZoom, DZ series, UltraZoom, MacroZoom
• anatomopathology	Diagnosis of diseases of organs or tissues. Cytopathology and forensic pathology	Delphi-X Observer, Achios-X Observer, iScope, bScope, BioBlue.Lab, StereoBlue, NexiusZoom, DZ series, UltraZoom
• bacteriology	Study of bacteria as subdivision of microbiology. Identification, classification	BlueScope, BioBlue.Lab, bScope, iScope, Achios-X Observer, Oxion Inverso, Delphi-X Observer
• biochemistry	Study of chemical processes within living organism. Identification and classification of enzymes and structure of biomolecules	BioBlue.Lab, bScope, iScope, Achios-X Observer
• biomedical	Study of medical microbiology, virology, epidemiology, biomedical engineering	Delphi-X Observer, Achios-X Observer, iScope, bScope, BioBlue.Lab
• biotechnology	Study of living organism in order to make food products, for plant protection (genetically modified organism) and other bioprocess engineering. Development of pharmaceutical drugs, genetic testing, enzymes production, biofuels, textile	Delphi-X Observer, Achios-X Observer, iScope, bScope, BioBlue.Lab, NexiusZoom, DZ series, UltraZoom, MacroZoom
• botany	Study of plants as branch of biology. Plant anatomy and morphology. Plant genetics and ecology. Plant biochemistry	BlueScope, BioBlue.Lab, iScope, Achios-X Observer, StereoBlue, NexiusZoom, DZ series, UltraZoom
• cell culture	Controlled growth of cells and tissues, fungal culture and microbiological culture	Delphi-X Inverso, Oxion Inverso, NexiusZoom, DZ series, UltraZoom
• chemistry	Study of the composition and properties of chemicals	iScope ***, bScope *, NexiusZoom, DZ series, UltraZoom
• cosmetics	Research, development and testing (safety) of substances for make-up or perfume	bScope *, iScope *, Achios-X Observer, NexiusZoom, DZ series, UltraZoom
• cytology	Study of cell structure, function an chemistry. Detection of cellular diseases	Delphi-X Observer, Achios-X Observer, iScope, bScope, BioBlue.Lab
• dermatology	Study and diagnosis, treatment of skin, nails and hair diseases	Achios-X Observer, iScope, BioBlue.Lab, NexiusZoom, StereoBlue, DZ series, UltraZoom, MacroZoom
• digital imaging	Observation and analysis of microscope images, save and captured the images and videos	CMEX cameras, CCD cameras, HD cameras, Cooled cameras, ProPad, MacroZoom
• embryo collection	Embryo collection and transfer in mares, pigs, cows. Quality control	NexiusZoom, DZ series, Z series
• embryology	Study of gametes, embryos and fetuses	BioBlue.Lab, bScope, iScope, Achios-X Observer, NexiusZoom, DZ series, UltraZoom, Z series
• entomology	Study of insects as branch of zoology. Identification and classification of beetles, flies, termites, moths and butterflies, bees, ants, wasps	BlueScope, BioBlue.Lab, bScope, iScope, Achios-X Observer, StereoBlue, NexiusZoom, DZ series, UltraZoom, MacroZoom
• environmental	Monitoring of environmental conditions such as water, atmosphere, ecosystems, soil and pollution	BlueScope, BioBlue.Lab, bScope, iScope, Achios-X Observer, StereoBlue, NexiusZoom, DZ series, UltraZoom
• fluorescence	Study of living and non-living material with the help of fluorescence markers (fluorochromes)	Delphi-X Observer**, Achios-X Observer,** iScope **, Oxion Inverso**, bScope **, DZ series**, UltraZoom**
• forensics	Analysis of scientific evidence. Toxicology, fingerprints, Forensic anthropology and archeology, forensic botany and entomology	BioBlue.Lab, bScope, bScope large samples, iScope, Achios-X Observer, Delphi-X Observer, Achios-X Inverso**, Oxion Inverso, NexiusZoom, DZ series, UltraZoom, Z series

LIFE SCIENCE LABORATORIES	FIELD OF APPLICATION	RECOMMENDED MODELS
• food and beverages	Quality and safety controls, before, during and after the production of food and beverages	BlueScope, BioBlue.Lab, bScope, iScope, Achios-X Observer
• genetics	Study of genes, heredity in living organism including bacteria, plants, animals and humans	Delphi-X Observer, Achios-X Observer, iScope, DZ series, UltraZoom
• hematology	Study and diagnosis, treatment and prevention of diseases of the blood	Delphi-X Observer, Achios-X Observer, iScope, bScope (dark filed), iScope (darkfield), iScope,
• histopathology	Microscopic examination of tissue, diagnosis of diseases	Delphi-X Observer, Achios-X Observer, iScope
• horticulture	Selective breeding of plants and fruit for production of food	BlueScope, BioBlue.Lab, bScope, iScope, Achios-X Observer, StereoBlue, NexiusZoom, DZ series, UltraZoom, MacroZoom
• in vitro fertilization	In vitro fertilization IVF. Quality control of collected egg and sperm	DZ series, UltraZoom
• marine miology	Study of organisms living in the ocean or seas as branch of biology	BioBlue.Lab, BlueScope, iScope, Achios-X Observer, NexiusZoom, DZ series, UltraZoom
• microbiology	Study of microscopic uni-, multi- or acellular small organisms such as protozoa, algae, bacteria and more. Identification and classification	Delphi-X Observer, Achios-X Observer, iScope, NexiusZoom, DZ series, UltraZoom
• mycology	Study of fungi as branch of biology. Identification and classification	BlueScope, BioBlue.Lab, bScope, iScope, Achios-X Observer, StereoBlue, NexiusZoom, DZ series, UltraZoom
• neuropathology	Study and diagnosis of diseases in nervous system tissue	Delphi-X Observer, Achios-X Observer, iScope, NexiusZoom, DZ series, UltraZoom
• oncology	Study and diagnosis, treatment and prevention of cancers	Delphi-X Observer, Achios-X Observer, iScope
• parasitology	Study of parasites, medical and veterinary	BlueScope, BioBlue.Lab, bScope, iScope, Achios-X Observer, StereoBlue, NexiusZoom, DZ series, UltraZoom
• pathology	Study and diagnosis of diseases	Delphi-X Observer, Achios-X Observer, iScope
• pharmaceutics	Development and production of drugs for medication. Quality assurance and inspection of produced products	iScope ***, StereoBlue, NexiusZoom, DZ series, UltraZoom
• phytopathology	Study and diagnosis of plant diseases	BlueScope, BioBlue.Lab, bScope, iScope, Achios-X Observer, StereoBlue, NexiusZoom, DZ series, UltraZoom, MacroZoom
• veterinary medicine	Prevention, diagnosis and treatment of diseases, injuries on animals	BlueScope, BioBlue.Lab, bScope, iScope, Achios-X Observer, Oxion Inverso, StereoBlue, NexiusZoom, DZ series, UltraZoom
• virology	Study and diagnosis of viruses and virus-such as agents	Delphi-X Observer, Achios-X Observer, BioBlue. Lab, iScope, bScope, BioBlue.Lab
• water treatment	Production of drinking water and wastewater treatment. Quality control and disease prevention	BlueScope, BioBlue.Lab, bScope, iScope, Achios-X Observer
• zoology	Animal biology. Study of invertebrates and vertebrates and related branches	BlueScope, BioBlue.Lab, bScope, iScope, Achios-X Observer, StereoBlue, NexiusZoom, DZ series, UltraZoom

** fluorescence models *** polarization models

INDUSTRY	FIELD OF APPLICATION	RECOMMENDED MODELS
• aerospace	Manufacturing and quality inspection of rockets and space vehicles related parts	Delphi-X Observer, Achios-X Observer, bScope large samples, iScope, NexiusZoom, DZ series, Z series
• agronomy & forestry	Selective breeding of plants, fruit and production of food from plants, wood from trees, fuel. Plant physiology and genetics research	bScope, bScope large samples, iScope, Achios-X Observer, StereoBlue, NexiusZoom, DZ series, UltraZoom, MacroZoom
• asbestos control	Research of asbestos fibers, environmental protection during restoration of older buildings	iScope, NexiusZoom, DZ series, UltraZoom, Z series
• automotive	Manufacturing and quality inspection of automotive related parts	Achios-X Observer, iScope, Achios-X Inverso, Oxion Inverso, NexiusZoom, DZ series, UltraZoom, Z series
• avionics	Manufacturing and quality inspection of aircraft related parts	Delphi-X Observer, Achios-X Observer, bScope large samples, iScope, NexiusZoom, DZ series, UltraZoom
• biochemistry	Study of chemical processes within living organism. Identification and classification of enzymes and structure of biomolecules	iScope, NexiusZoom, DZ series, UltraZoom
• chemistry	Study of the composition and properties of chemicals	Achios-X Observer, iScope
• cosmetics	Research, development and testing (safety) of substances for make-up or perfume	bScope, iScope, Achios-X Observer, NexiusZoom, DZ series, UltraZoom
• digital imaging	Observation and analysis of microscope images, save and captured the images and videos	CMEX cameras, CCD cameras, HD cameras, ProPad, MacroZoom
• electronics	Development, production, assembling and inspection of electronic components or circuitry	iScope, Achios-X Observer, NexiusZoom, DZ series, UltraZoom, Z series, BE-18 LED, MacroZoom
• environmental	Monitoring of environmental conditions such as water, atmosphere, ecosystems, soil and pollution	BioBlue.Lab, bScope, iScope, Achios-X Observer, StereoBlue, NexiusZoom, DZ series
• food and beverages	Quality and safety controls, before, during and after the production of food and beverages	BioBlue.Lab, bScope, iScope, Achios-X Observer
• forensics	Analysis of scientific evidence. Toxicology, fingerprints, Forensic anthropology and archeology, forensic botany and entomology	BioBlue.Lab, bScope, bScope large samples, iScope, Achios-X Observer, Oxion Inverso, Oxion Inverso, Achios-X Inverso, NexiusZoom, DZ series, UltraZoom, Z series
• geology, mineralogy	Earth science, studying the solid, rocks and processes. Identification and classification of rocks and minerals	Achios-X Observer, bScope large samples, iScope, Oxion Inverso, StereoBlue, NexiusZoom, DZ series, UltraZoom, MacroZoom
• geology, petrology	Identification by means of a petrographic microscope	iScope (polarization)
• glass industry	Quality control, before, during and after the production of glass and coatings	Achios-X Observer, iScope, Achios-X Inverso, Oxion Inverso, bScope, StereoBlue, NexiusZoom, DZ series, UltraZoom
• horticulture	Selective breeding of plants and fruit for production of food	BioBlue.Lab, bScope, iScope, Achios-X Observer, StereoBlue, NexiusZoom, DZ series, UltraZoom, MacroZoom

INDUSTRY	FIELD OF APPLICATION	RECOMMENDED MODELS
• jewelry	Precise manufacturing of very small decorative items such as brooches, rings, bracelets and more	BE-18 LED series, StereoBlue, NexiusZoom, DZ series, Z series
• mechanics	Manufacturing and quality inspection of mechanical parts	Achios-X Observer, iScope, Achios-X Inverso, Oxion Inverso, bScope, bScope large samples, StereoBlue, NexiusZoom, DZ series, UltraZoom, MacroZoom
• metallurgy	Manufacturing and quality inspection of metallic elements, intermetallic compounds and alloys	Achios-X Observer, iScope, Achios-X Inverso, Oxion Inverso, bScope, bScope large samples, StereoBlue, NexiusZoom, DZ series, UltraZoom, MacroZoom
• mining	Extraction of minerals Identification, quantitative and qualitative evaluation of minerals	iScope (polarization), Achios-X Inverso, Oxion Inverso, bScope, StereoBlue, NexiusZoom, DZ series, UltraZoom
• paper industry	Production of paper related products. Quality inspection	Achios-X Observer, iScope, bScope, StereoBlue, NexiusZoom, DZ series, UltraZoom, MacroZoom
• petrochemical	Research and transformation of crude oil and natural gas	Achios-X Observer, iScope, bScope, StereoBlue, NexiusZoom, DZ series, UltraZoom
• petrology	Study of the composition and structure of rocks as branch of geology. Identification by means of polarization microscopy	iScope (polarization), StereoBlue, NexiusZoom, DZ series, UltraZoom
• pharmaceutics	Development and production of drugs for medication. Quality assurance and inspection of produced products	Achios-X Observer, iScope, StereoBlue, NexiusZoom, DZ series, UltraZoom
• plastics	Development and production of plastics and plastic based compounds. Quality assurance and inspection	Achios-X Observer, iScope, Achios-X Inverso, Oxion Inverso, bScope, StereoBlue, NexiusZoom, DZ series, UltraZoom
• printing industry	Production of relief printing, lithography	Achios-X Observer, iScope, bScope , AP series, StereoBlue, NexiusZoom, DZ series, UltraZoom, MacroZoom
• textile	Development and production of all kinds of textile based products. Quality assurance and inspection	Achios-X Observer, iScope, Achios-X Inverso, Oxion Inverso, AP series, StereoBlue, NexiusZoom, DZ series, UltraZoom, MacroZoom
• water treatment	Production of drinking water and wastewater treatment. Quality control and disease prevention	BioBlue.Lab, bScope, iScope, Achios-X Observer,
• wood production	Wood production for construction material, fuel. Quality control	Achios-X Observer, bScope large samples, iScope, Achios-X Inverso, Oxion Inverso, AP series, StereoBlue, NexiusZoom, DZ series, UltraZoom, MacroZoom

index

PRODUCT	P	A	G	E
Abbe refractometer				405
Accessories for microscopy				360
Achios-X Inverso biological		122		
Achios-X Inverso digital		322	322	
Achios-X Inverso fluorescence		168		
Achios-X Inverso metallurgical			296	
Achios-X Observer biological		104		
Achios-X Observer digital		322	322	
Achios-X Observer fluorescence		158		
Achios-X Observer materials			280	
Adapter guide	358	358	358	
Advanced USB cameras		342	342	
Antoni van Leeuwenhoek (about)		81		
AP series	72			
APL (about)	57			
BE-18 Series			260	
BioBlue	20			
BioBlue digital	310	310		
BioBlue.Lab	28	90		
Biological microscopes	6	76		
BlueScope	32	78		
BlueScope digital	314	314		
bScope biological	36	82		
bScope digital	320	320		
bScope fluorescence		142		
bScope large samples			268	
bScope materials			264	
Camera resolution (how to match)	331	331	331	
Camera resolutions & limits (about)	313	313	313	
Cleaning optics (how to)	307	307	307	
CMEX Pro USB-3.0 cameras		342	342	
CMEX USB-2.0 cameras	340	340		

PRODUCT	P	A	G	E
CMEX-WIFI camera	344	344	344	
Cold light sources				346
Cooled camera		345		
Delphi-X Inverso biological		128		
Delphi-X Inverso fluorescence		174		
Delphi-X Inverso materials			300	
Delphi-X Observer biological		112		
Delphi-X Observer digital		322	322	
Delphi-X Observer fluorescense		162		
Delphi-X Observer materials			284	
Differential interference contrast			291	
Digital MacroZoom	328	328	328	
Digital microscopes	306	306	306	
Digital refractometers				402
Digital solutions	304	304	304	
Disposables				392
Dissection instruments				370
Dissection kits				372
Dual colored LED (about)	35			
DZ series		214	248	
EcoBlue	14			
Ecoblue digital	308			
EduBlue	52			
EduBlue digital	316			
EduBlue LCD	318		318	
Field of view (about)	27			
Fluorescence (about)		173		
Fluorescense filter sets		188		
Fluorescense LED light sources		186		
Fluorescense microscopes		140		
Globe slides (for professional use)				386
Handheld magnifiers				396

PRODUCT	P	A	G	E
Handheld refractometers				402
Handheld spectroscopes				408
High-definition cameras	346	346	346	
Hoffman modulation contrast			299	
How to keep the optics clean	337	337	337	
How to match camera resolution	331	331	331	
How to set up a stereo microscope	63	209	237	
Illumination solutions				362
ImageFocus software	352	352	352	
Inverted biological		122		
Inverted fluorescence		168		
Inverted materials			292	
iScope biological	42	94		
iScope digital		322	322	
iScope fluorescence		148		
iScope infectious diseases		154		
iScope materials			272	
LaboPad	350	350	350	
LED cold light sources				364
LED ringlight sources				366
LED light sources fluorescence		186		
Light sources				362
MacroZoom	326	326	326	
Magnifiers				396
Magnifiers (about)			259	
Malaria and TB (about)		157		
Measuring microscopes				396
MicroBlue	8			
MicroBlue digital	306			
Microscope basics (about)	13			
Microscope optics (about)		225		
NexiusZoom ESD			228	

PRODUCT	P	A	G	E
NexiusZoom and -EVO	64	200	228	
NexiusZoom for gemology			238	
Objectives (about)	19			
Other products				394
Optical instruments				394
Oxion Inverso biological		134		
Oxion Inverso materials			292	
Oxion Inverso fluorescence		180		
Petrological microscopy (about)			295	
Polarimeters				406
Preparation accessories				370
Prepared slides				374
Prepared slides Individual				382
Professional slides				386
Refractometers				400
Ringlights				366
sCMEX USB-3.0 camera		343	343	
Slides (for professional use)				386
Software	352	352	352	
Spectroscopes				408
Stains				393
StereoBlue	58	196	244	
Stereo microscopes	76	194	227	
Stereo microscopes (about)			253	
Stereo microscope (how to set up)	63	209	237	
UltraZoom biological		210		
UltraZoom fluorescence		212		
UltraZoom metallurgical			242	
USB cameras	340	340	340	
WiFi camera	344	344	344	
Z series		220	254	

LRQA CERTIFIED ISO 13485

LRQA CERTIFIED ISO 9001

The Euromex Quality System is certified according to ISO 9001:2015, and ISO 13485:2016 for medical supplies. This supports our pursuit of continuous improvement and our on-going commitment to provide our world-wide customers assurance of product quality

DISCLAIMER

All information and materials contained in this catalog have been prepared solely for the purpose of providing general information about the products offered by Euromex Microscopen bv. The content of and all information published in this catalog are provided in good faith as a convenience to you and may be used for information purposes only and at all times in accordance with these terms of access.

Euromex Microscopen bv does not warrant the completeness or accuracy of information obtained from its catalog and does not undertake to update or correct its content or the information and/or materials contained on it on a regular basis.

Euromex Microscopen bv reserves the right to make improvements and/or changes to (including the removal of) the products described or referred to in the catalog and to delete and/or move any such information at any time and without notice.

Euromex and Physix are registered trademarks of Euromex Microscopen bv
bScope, iScope and Delphi-X Observer are registered trademarks of Euromex Microscopen bv
© 2026 Copyright Euromex Microscopen bv

EUROMEX HEADQUARTERS

Euromex Microscopen bv
Typograaf 8 • 6921 VB Duiven • The Netherlands
+31 (0) 26 323 22 11 • info@euromex.com

SALES OFFICE WORLD WIDE

Euromex Microscopen Spain, S.L
Carretera de Barcelona 88, Entresuelo
Esc. B - Local 9 • 08302 Mataró, Spain
+34 (0) 937 415 609 • info@euromex.com

SALES OFFICE NORTH AMERICA

Globe Scientific
400 Corporate Drive • Mahwah, NJ 07430 • USA
1 201-599-1400 • usa@euromex.com

www.euromex.com



Icons



v.625111