FIMET

MADE IN FINLAND

THE ART OF MEDICAL DESIGN

F1

For You and Your Patient



We know the art of medical design

Our goal at Fimet is to make your work easier. We work together with dental professionals from all over the world and bring those ideas and suggestions into our designs. We are a partner that reacts to your needs quickly and flexibly.

We are a Finnish based company but through our global distributor partners, we operate in more than 50 countries. Our development, design and manufacturing are based in Finland.

We use only the highest quality materials to ensure state-of-the-art design and experience. You can also give the Fimet dental system a personal touch with a wide selection of colors and patterns to choose from.



F1

Custom Made Dental Treatment Systems for Dentists and Oral Health Care Specialists

Improving Your Patient Care Experience with a Smile

Why dental professionals choose FIMET over other brands

- Features and functions custom made to suit your requirements
- Quality made in Finland
- Easy to start using and affordable to maintain
- Provides maximum comfort for the patients during treatment
- Happy healthy patients – repeated visits
- Helps dental professionals improve clinical outcomes and enhance productivity
- Cares for your clinic image

F1 Traditional

The Fimet F1 dental treatment system can be equipped also with hanging instrument hoses for those users who prefer this way of workflow.



Simply elegant

F1's elegant and stylish design includes many small details that have a big impact on the way you work.

Safe choice

Keep your patients safe. Smooth surfaces and upholsteries make both cleaning and disinfection easy.

Designed to work

Adjust the chair position and instrument speed ranges so that the chair fits your way of working.

Compact

Small base means more working space for both the dentist and assistant. Everything is within easy reach.

F1 Continental

The Fimet F1 dental treatment system combines innovative solutions with elegant design. The treatment systems are ergonomic, high-quality units that can be customized for each user's needs and preferences.

Simply elegant

The design combines Nordic elegance with cutting-edge functionality, creating an efficient working environment.

Safe choise

F1's elegant and stylish design includes many small details that have a big impact on the way you work.

Designed to work

NEO's design is user-centric, where all the tools needed for work are easily accessible.

Compact

Despite its compact size, the device is designed to meet all the needs of a demanding user. upholsteries make both cleaning



Our mission is to design and produce affordable, high-quality dental treatment systems to meet your needs and expectations.

For You and Your patient

The Fimet F1's modularity eases the workflow for the dentist and assistant. It also makes the treatment more pleasent for the patient. Control the system with a wireless foot control, joystick or user panel.

Height can be adjusted between 40 to 91 cm

Supports camera and display integration

Arm rests rotate 90° sideways and are removable

Small base that fits even the smallest spaces

Space for 5 instruments on the bridge

Adjustable chair position and instrument speed

Wireless foot control

The multi-functional and wireless foot control (horizontal or vertical) allows you to control instruments, the patient chair and other functions such as operating light and chip-blower.

You will thus be able to focus on your work and minimize cross-contamination as you do not need to touch the instrument console during normal treatments.





First-class features



Only well-known quality instruments are used in the F1 treatment systems.



The flexible suction arm is equipped with high and low volume suction tubings plus further options.



F1 has an integrated flushing system for all instruments using water.



The arm rests can be turned away and even removed to allow easy access.



The water unit can be equipped either with valves for wet suction system or a separator intended for dry suction system.



The wide movement range of the F1 patient chair makes working even in upright position possible.

Stools

The F1 stools can be delivered in the same upholstery colors as the F1 patient chair. Three stool options are available.



F1 Dental stool



F1 Classic stool



F1 Ponychair saddle stool

Colors

Easy-to-clean and comfortable upholsteries are available in many fashionable colors.

F1 upholstery colors
• synthetic leather, PVC

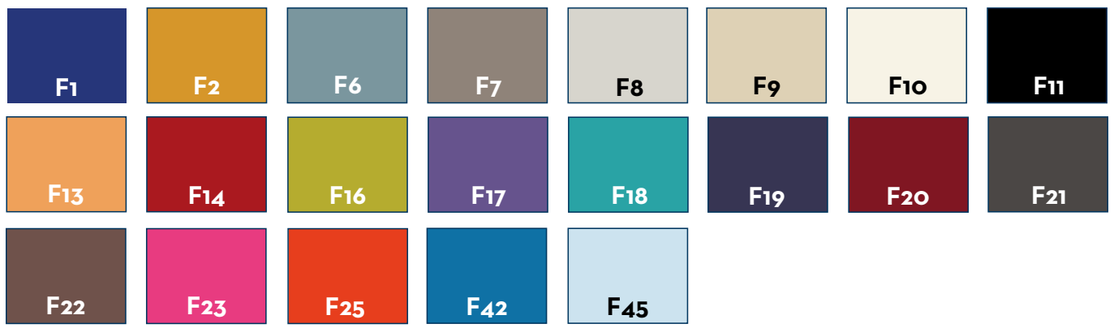

The specifications and colors in this leaflet may vary from the actual product and are subject to change without prior notice.

Options and features

Fimet F1 treatment system can be configured with a large variety of properties and options according to your wishes and preferences.

F1 Instrument Bridge
Space for five instruments and can include the following options:
Electric micromotor(s) with or without brushes, with light
Turbine tubing(s) with light
Ultrasonic scaler, with or without light
3- or 6-way syringe
Polymerization light
Intraoral camera

Suction Unit
Includes:
High and low volume suction hoses
Optional syringe
Optional polymerization light
Optional intraoral camera

Water Unit
Can be equipped with:
Integrated amalgam separator
Valves for wet suction system
Water bottle
Detachable porcelain bowl
Suction filter
Water heater

F1 Patient Chair
Includes:
Arm rests rotate 90 degrees to side to allow easy access, also removable
Four individually adjustable settings including last-position-program
Two-joint adjustable head rest
Knee-break chair

Standards
CE-approved according to Medical Device Directive 93/42/EC
ISO 13485 certified quality system

Further features and options:
Led patient light
Support for intraoral camera and display integration
Wireless, multifunctional foot control for chair and instrument functions. Available in horizontal or vertical version
Tray holder for one or two standard trays

For more information, visit www.fimet.fi or contact an authorized dealer.

F1 Dimensions

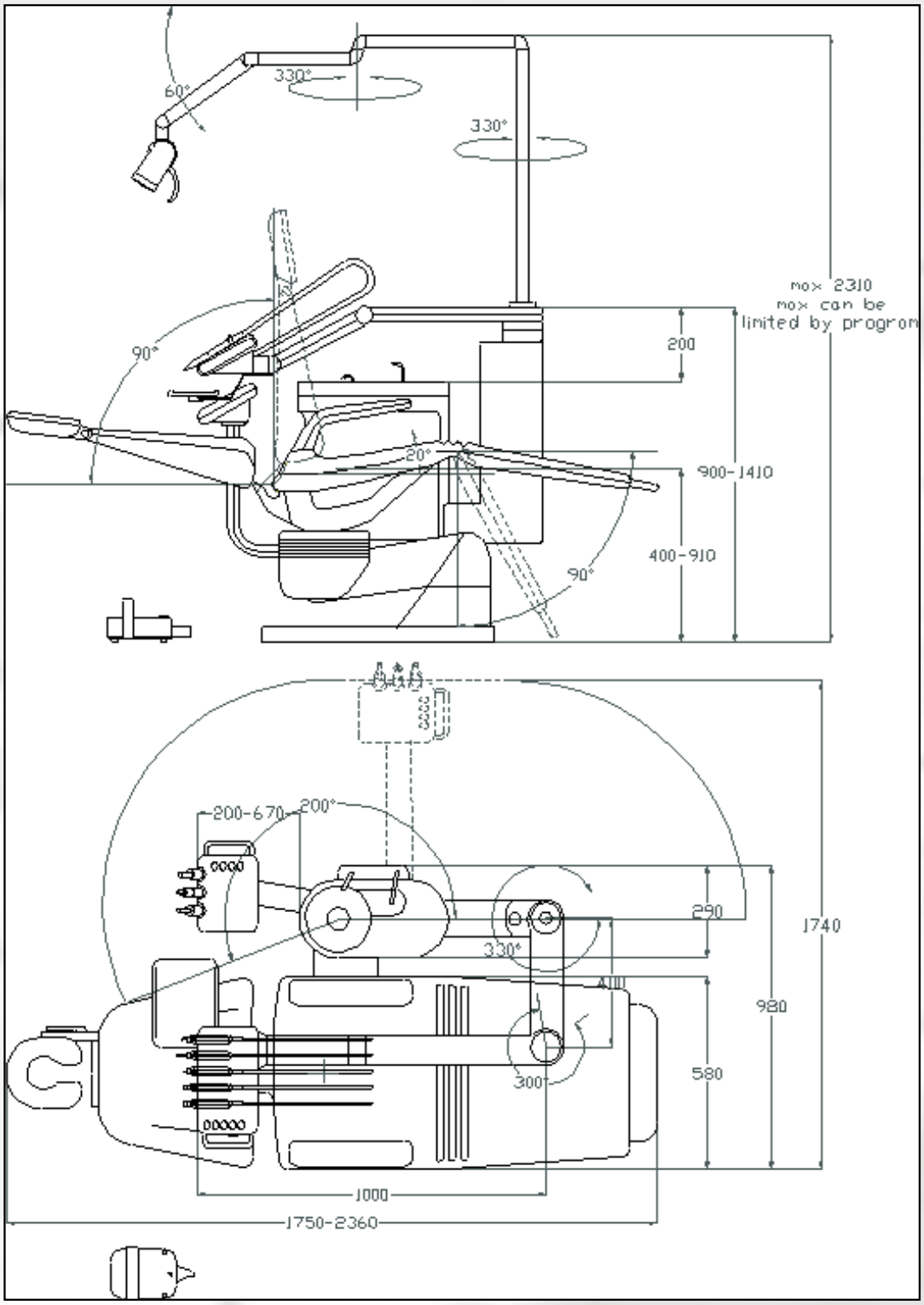

FIMET

Fimet Oy
Teollisuustie 6
FI-07230 Askola
Finland

Tel: +358 19 521 6600
fimet@fimet.fi
www.fimet.fi

Professional clothing shown made by Pastelli S.R.L - www.pastelli.com.